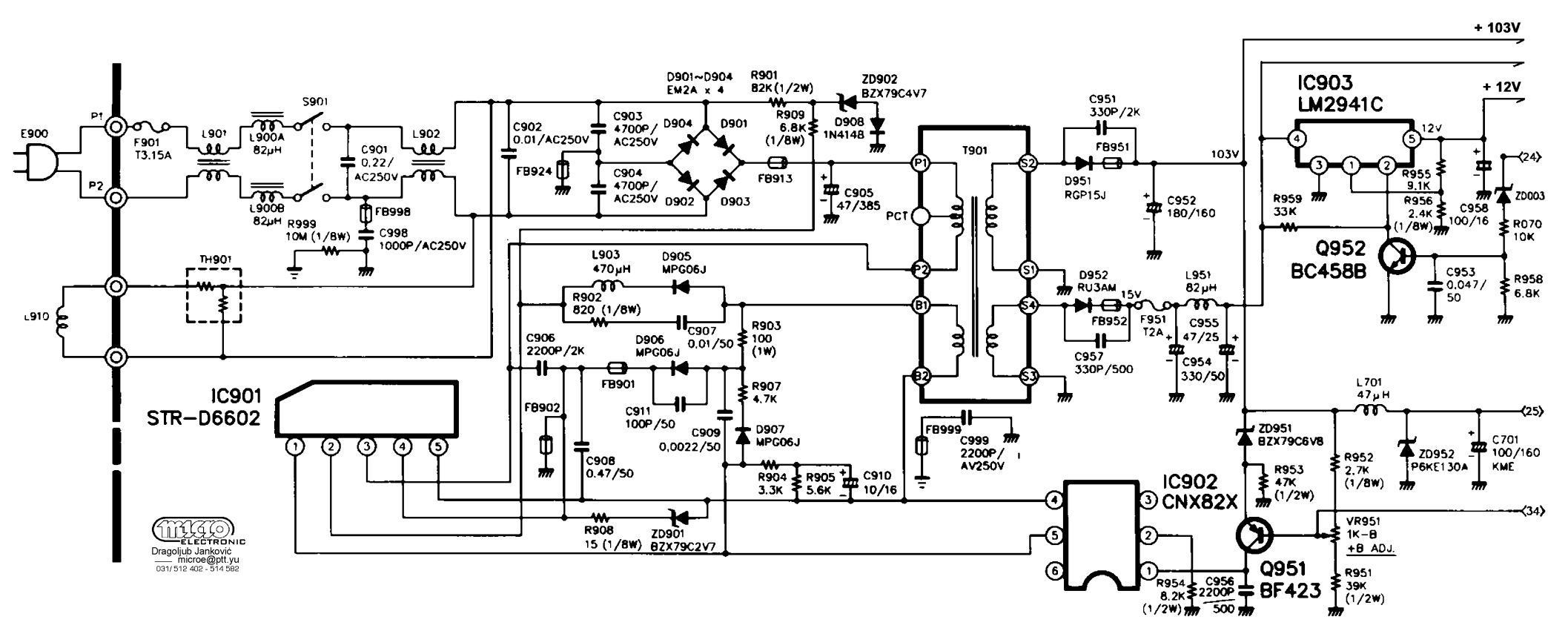
+ 103V
+ 12V
E900
P1
P2
F901
T3.15A
L901
L900A
82μH
L900B
82μH
S901
C901
0.22/
AC250V
L902
R999
10M (1/8W)
FB998
C998
1000P/AC250V
TH901
L910
C902
0.01/AC250V
FB924
C903
4700P/
AC250V
C904
4700P/
AC250V
D901~D904
EM2A x 4
D904
D901
D902
D903
R901
82K(1/2W)
R909
6.8K
(1/8W)
FB913
ZD902
BZX79C4V7
D908
1N4148
C905
47/385
T901
PCT
P1
P2
B1
B2
S1
S2
S3
S4
C951
330P/2K
FB951
D951
RGP15J
C952
180/160
103V
D952
RU3AM
15V
FB952
F951
T2A
L951
82μH
C955
47/25
C954
330/50
C957
330P/500
IC903
LM2941C
12V
R955
9.1K
R956
2.4K
(1/8W)
C958
100/16
ZD003
R070
10K
R958
6.8K
R959
33K
Q952
BC458B
C953
0.047/
50
L903
470μH
D905
MPG06J
R902
820 (1/8W)
C907
0.01/50
R903
100
(1W)
C906
2200P/2K
D906
MPG06J
FB901
C911
100P/50
R907
4.7K
C909
0,0022/50
D907
MPG06J
FB902
C908
0.47/50
R904
3.3K
R905
5.6K
C910
10/16
R908
15 (1/8W)
ZD901
BZX79C2V7
FB999
C999
2200P/
AV250V
IC901
STR-D6602
IC902
CNX82X
L701
47μH
ZD951
BZX79C6V8
R953
47K
(1/2W)
R952
2.7K
(1/8W)
ZD952
P6KE130A
C701
100/160
KME
VR951
1K-B
+B ADJ.
R951
39K
(1/2W)
R954
8.2K
(1/2W)
C956
2200P
500
Q951
BF423
(24)
(25)
(34)
MICRO ELECTRONIC
Dragoljub Janković
microe@ptt.yu
031/512 402 - 514 582