SGS-THOMSON MICROELECTRONICS

HCC/HCF4017B
HCC/HCF4022B

COUNTERS/DIVIDERS

4017B DECADE COUNTER WITH 10 DECODED OUTPUTS

4022B OCTAL COUNTER WITH 8 DECODED OUTPUTS

- FULLY STATIC OPERATION
- MEDIUM SPEED OPERATION-12MHz (typ.) AT V_{DD} = 10V
- STANDARDIZED SYMMETRICAL OUTPUT CHARACTERISTICS
- QUIESCENT CURRENT SPECIFIED TO 20V FOR HCC DEVICE
- INPUT CURRENT OF 100nA AT 18V AND 25°C FOR HCC DEVICE
- 100% TESTED FOR QUIESCENT CURRENT
- 5V, 10V, AND 15V PARAMETRIC RATINGS
- MEETS ALL REQUIREMENTS OF JEDEC TENTATIVE STANDARD N° 13A, "STANDARD SPECIFICATIONS FOR DESCRIPTION OF "B" SERIES CMOS DEVICES"

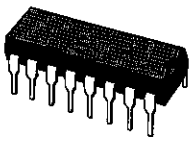

EY
(Plastic Package)

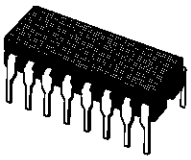

F
(Ceramic Frit Seal Package)

M1
(Micro Package)

C1
(Plastic Chip Carrier)

ORDER CODES :

HCC40XXBF	HCF40XXBM1
HCF40XXBEY	HCF40XXBC1

DESCRIPTION

The **HCC4017B/4022B** (extended temperature range) and **HCF4017B/4022B** (intermediate temperature range) are monolithic integrated circuits, available in 16-lead dual in-line plastic or ceramic package and plastic micro package.

The **HCC/HCF4017B** and **HCC/HCF4022**B are 5-stage and 4-stage Johnson counters having 10 and 8 decoded outputs, respectively. Inputs include a CLOCK, a RESET, and a CLOCK INHIBIT signal. Schmitt trigger action in the CLOCK input circuit provides pulse shaping that allows unlimited clock input pulse rise and fall times. These counters are advanced one count at the positive clock signal transition if the CLOCK INHIBIT signal is low. Counter advancement via the clock line is inhibited when the CLOCK INHIBIT signal is high. A high RESET signal clears the counter to its zero count. Use of the Johnson decade-counter configuration permits high-speed operation, 2-input decimal-decode gating, and spike-free decoded outputs. Anti-lock gating is provided, thus assuring proper counting sequence. The decoded outputs are normally low and go high only at their respective decoded time slot. Each decoded output remains high for one full clock cycle. A CARRY-OUT signal completes one

PIN CONNECTIONS

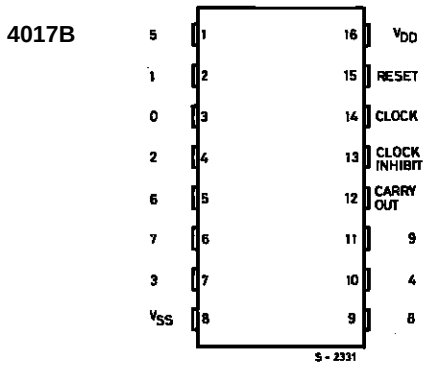

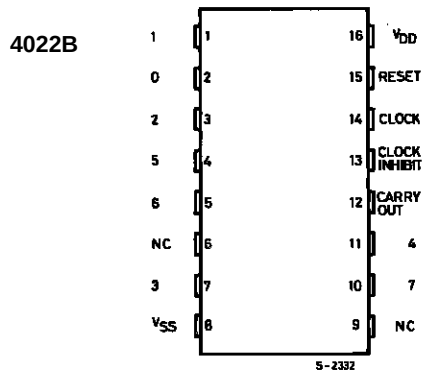

cycle every 10 clock input cycles in the **HCC/HCF4017B** or every 8 clock input cycles in the **HCC/HCF4022B** and is used to ripple-clock the succeeding device in a multi-device counting chain.

FUNCTIONAL DIAGRAM

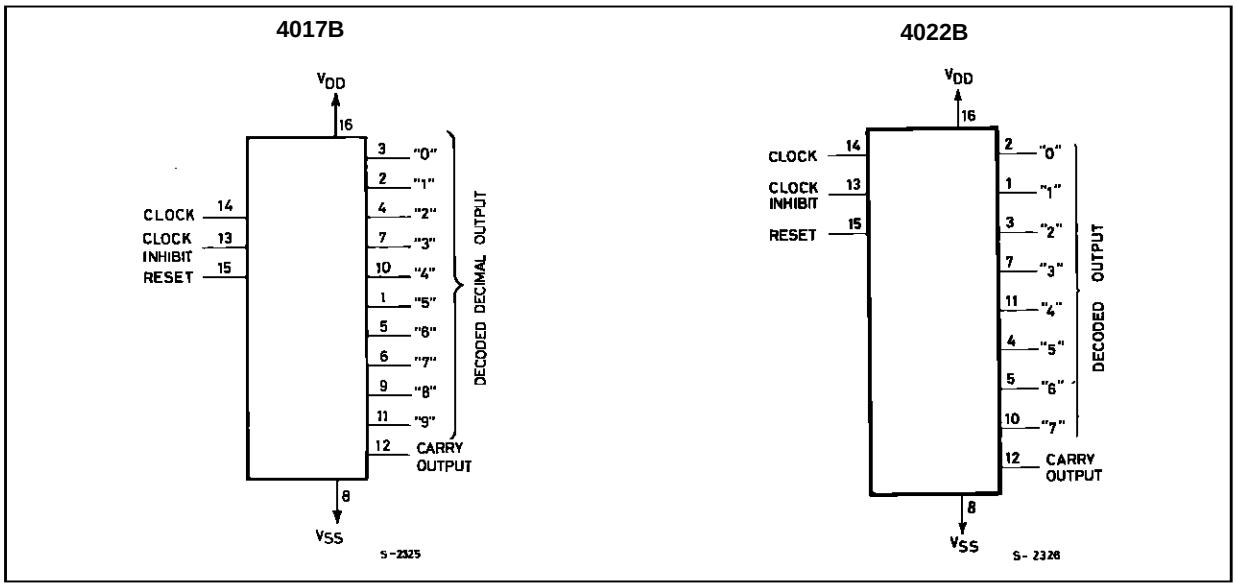

ABSOLUTE MAXIMUM RATINGS

Symbol	Parameter	Value	Unit
V_{DD}*	Supply Voltage : **HCC** Types **HCF** Types	– 0.5 to + 20 – 0.5 to + 18	V V
V_I	Input Voltage	– 0.5 to V_{DD} + 0.5	V
I_I	DC Input Current (any one input)	± 10	mA
P_{tot}	Total Power Dissipation (per package) Dissipation per Output Transistor for T_{op} = Full Package-temperature Range	200 100	mW mW
T_{op}	Operating Temperature : **HCC** Types **HCF** Types	– 55 to + 125 – 40 to + 85	°C °C
T_{stg}	Storage Temperature	– 65 to + 150	°C

Stresses above those listed under "Absolute Maximum Ratings" may cause permanent damage to the device. This is a stress rating only and functional operation of the device at these or any other conditions above those indicated in the operational sections of this specification is not implied. Exposure to absolute maximum rating conditions for external periods may affect device reliability.

* All voltages values are referred to V_{SS} pin voltage.

RECOMMENDED OPERATING CONDITIONS

Symbol	Parameter	Value	Unit
V_{DD}	Supply Voltage : **HCC** Types **HCF** Types	3 to 18 3 to 15	V V
V_I	Input Voltage	0 to V_{DD}	V
T_{op}	Operating Temperature : **HCC** Types **HCF** Types	– 55 to + 125 – 40 to + 85	°C °C

LOGIC DIAGRAMS

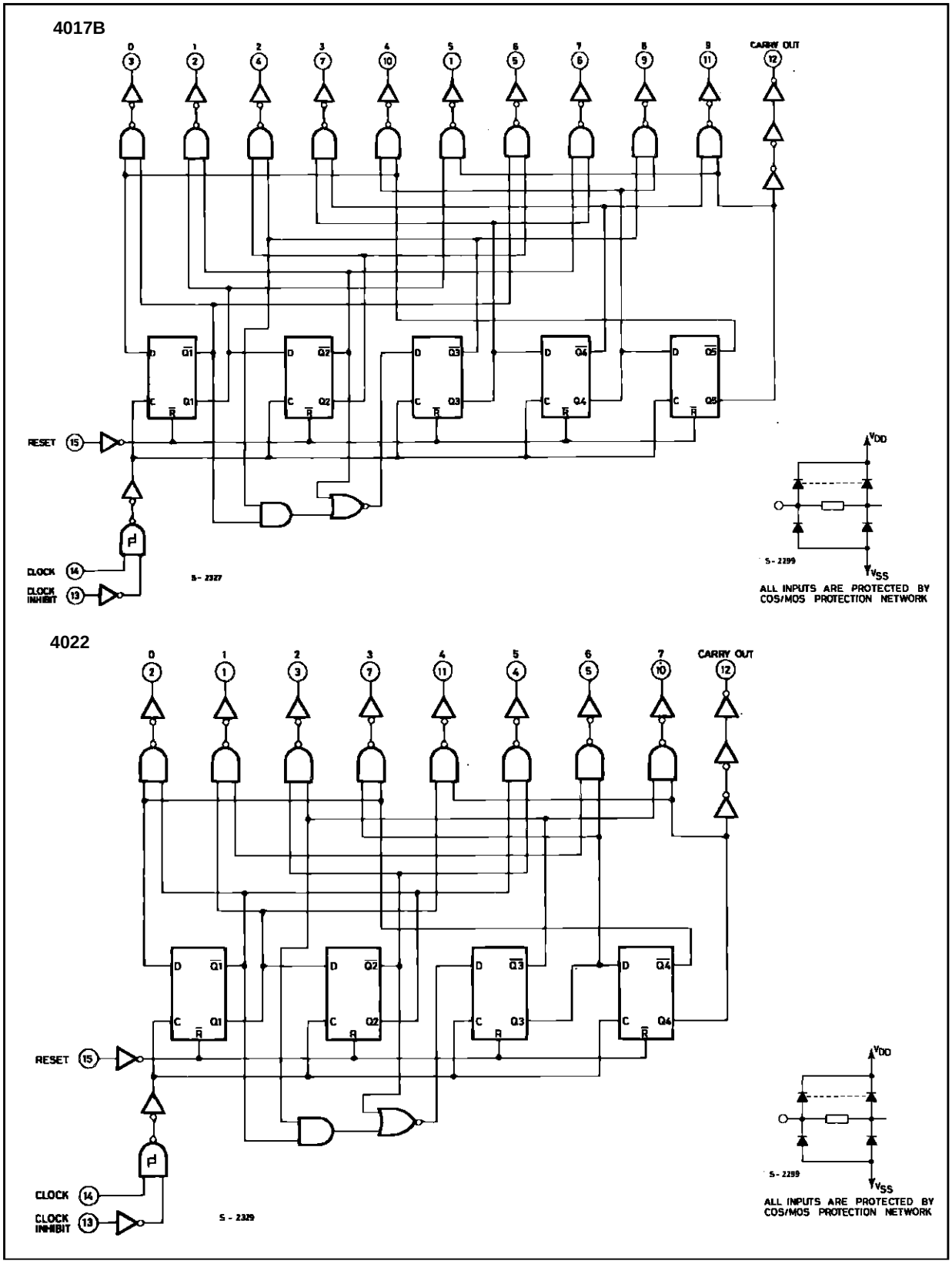

TIMING DIAGRAMS

4017B

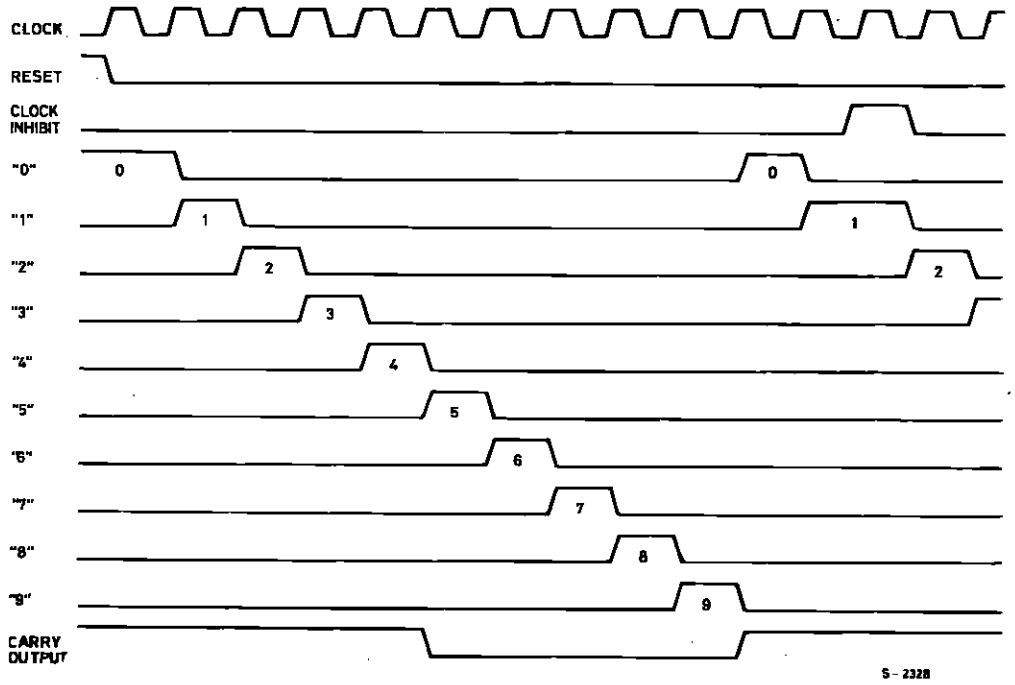

4022B

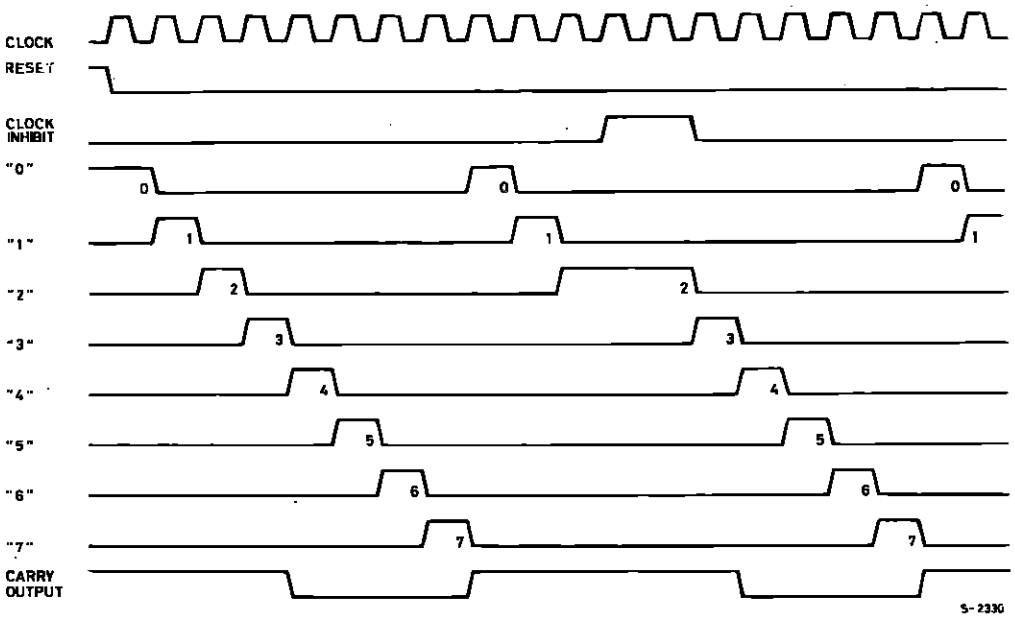

STATIC ELECTRICAL CHARACTERISTICS (over recommended operating conditions)

Symbol	Parameter		Test Conditions				Value							Unit
			V_I (V)	V_O (V)	$\|I_O\|$ (µA)	V_{DD} (V)	T_{Low}*		25°C			T_{High}*		
							Min.	Max.	Min.	Typ.	Max.	Min.	Max.	
I_L	Quiescent Current	HCC Types	0/ 5			5		5		0.04	5		150	µA
			0/10			10		10		0.04	10		300	
			0/15			15		20		0.04	20		600	
			0/20			20		100		0.08	100		3000	
		HCF Types	0/ 5			5		20		0.04	20		150	
			0/10			10		40		0.04	40		300	
			0/15			15		80		0.04	80		600	
V_{OH}	Output High Voltage		0/ 5		< 1	5	4.95		4.95			4.95		V
			0/10		< 1	10	9.95		9.95			9.95		
			0/15		< 1	15	14.95		14.95			14.95		
V_{OL}	Output Low Voltage		5/0		< 1	5		0.05			0.05		0.05	V
			10/0		< 1	10		0.05			0.05		0.05	
			15/0		< 1	15		0.05			0.05		0.05	
V_{IH}	Input High Voltage			0.5/4.5	< 1	5	3.5		3.5			3.5		V
				1/9	< 1	10	7		7			7		
				1.5/13.5	< 1	15	11		11			11		
V_{IL}	Input Low Voltage			4.5/0.5	< 1	5		1.5			1.5		1.5	V
				9/1	< 1	10		3			3		3	
				13.5/1.5	< 1	15		4			4		4	
I_{OH}	Output Drive Current	HCC Types	0/ 5	2.5		5	– 2		– 1.6	– 3.2		– 1.15		mA
			0/ 5	4.6		5	– 0.64		– 0.51	– 1		– 0.36		
			0/10	9.5		10	– 1.6		– 1.3	– 2.6		– 0.9		
			0/15	13.5		15	– 4.2		– 3.4	– 6.8		– 2.4		
		HCF Types	0/ 5	2.5		5	– 1.53		– 1.36	– 3.2		– 1.1		
			0/ 5	4.6		5	– 0.52		– 0.44	– 1		– 0.36		
			0/10	9.5		10	– 1.3		– 1.1	– 2.6		– 0.9		
			0/15	13.5		15	– 3.6		– 3.0	– 6.8		– 2.4		
I_{OL}	Output Sink Current	HCC Types	0/ 5	0.4		5	0.64		0.51	1		0.36		mA
			0/10	0.5		10	1.6		1.3	2.6		0.9		
			0/15	1.5		15	4.2		3.4	6.8		2.4		
		HCF Types	0/ 5	0.4		5	0.52		0.44	1		0.36		
			0/10	0.5		10	1.3		1.1	2.6		0.9		
			0/15	1.5		15	3.6		3.0	6.8		2.4		
I_{IH}, I_{IL}	Input Leakage Current	HCC Types	0/18	Any Input		18		± 0.1		$\pm 10^{-5}$	± 0.1		± 1	µA
		HCF Types	0/15			15		± 0.3		$\pm 10^{-5}$	± 0.3		± 1	
C_I	Input Capacitance			Any Input						5	7.5			pF

* T_{Low} = – 55°C for **HCC** device : – 40°C for **HCF** device.
* T_{High} = + 125°C for **HCC** device : + 85°C for **HCF** device.
The Noise Margin for both "1" and "0" level is : 1V min. width V_{DD} = 5V, 2V min. width V_{DD} = 10V, 2.5V min. width V_{DD} = 15V.

DYNAMIC ELECTRICAL CHARACTERISTICS (T_{amb} = 25°C, C_L = 50pF, R_L = 200kΩ, typical temperature coefficient for all V_{DD} = 0.3%/°C values, all input rise and fall time = 20ns)

Symbol	Parameter	Test Conditions		Value			Unit
			V_{DD} (V)	Min.	Typ.	Max.	
CLOCKED OPERATION							
t_{PLH}, t_{PHL}	Propagation Delay Time Decode Out		5		325	650	ns
			10		135	270	
			15		85	170	
	Carry Out		5		300	600	ns
			10		125	250	
			15		80	160	
t_{THL}, t_{TLH}	Transition Time Carry Out or Decoded Out Line		5		100	200	ns
			10		50	100	
			15		40	80	
f_{CL}*	Maximum Clock Input Frequency		5	2.5	5	5	MHz
			10	5	10		
			15	5.5	11		
t_W	Minimum Clock Pulse Width		5		100	200	ns
			10		45	90	
			15		30	60	
t_r, t_f	Clock Input Rise or Fall Time		5	Unlimited			µs
			10				
			15				
t_{setup}	Data Setup Time Minimum Clock Inhibit		5		115	230	ns
			10		50	100	
			15		35	7.5	
RESET OPERATION							
t_{PLH}, t_{PHL}	Propagation Delay Time Carry Out or Decode Out Lines		5		265	530	ns
			10		115	230	
			15		85	170	
t_W	Minimum Reset Pulse Width		5		130	260	ns
			10		55	110	
			15		30	60	
t_{rem}	Minimum Reset Removal Time		5		200	400	ns
			10		140	280	
			15		75	150	

* Measured with respect to carry output line.

Typical Output Low (sink) Current Characteristics.

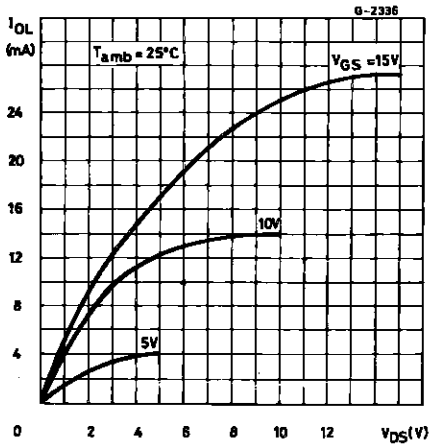

Minimum Output Low (sink) Current Characteristics.

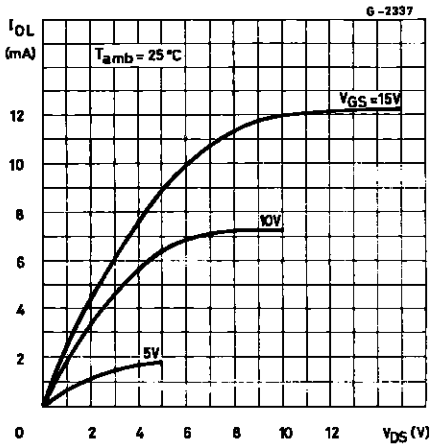

Typical Output High (source) Current Characteristics.

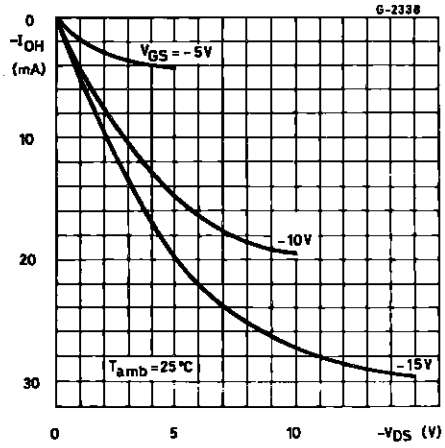

Minimum Output High (source) Current Characteristics.

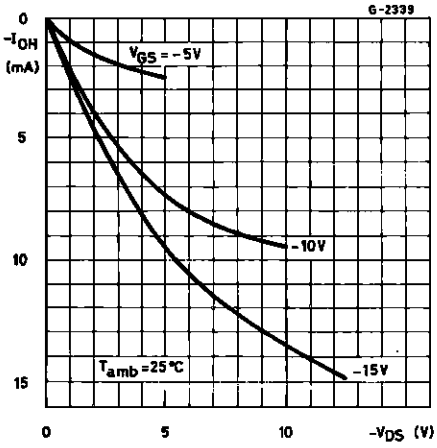

TYPICAL APPLICATIONS

Divide by N Counter (N ≤ 10) with N Decoded Outputs.

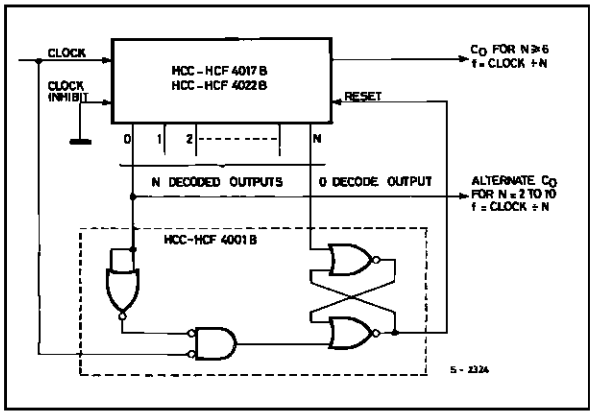

When the Nth decoded output is reached (N^{th} clock pulse) the S-R flip-flop (constructed from two NOR gates of the **HCC/HCF4001B**) generates a reset pulse which clears the **HCC/HCF4017B** to its zero count. At this time, if the Nth decoded output is greater than or equal to 6, the C_{OUT} line goes high to clock the next **HCC/HCF4017B** counter section. The "0" decoded output also goes high at this time. Coincidence of the clock low and decoded "0" output high resets the S-R flip flop to enable the **HCC/HCF4017B**. If the Nth decoded output is less than 6, the C_{OUT} line will not go high and, therefore, cannot be used. In this case "0" decoded output may be used to perform the clocking function for the next counter.

Plastic DIP16 (0.25) MECHANICAL DATA

DIM.	mm			inch		
	MIN.	TYP.	MAX.	MIN.	TYP.	MAX.
a1	0.51			0.020		
B	0.77		1.65	0.030		0.065
b		0.5			0.020	
b1		0.25			0.010	
D			20			0.787
E		8.5			0.335	
e		2.54			0.100	
e3		17.78			0.700	
F			7.1			0.280
I			5.1			0.201
L		3.3			0.130	
Z			1.27			0.050

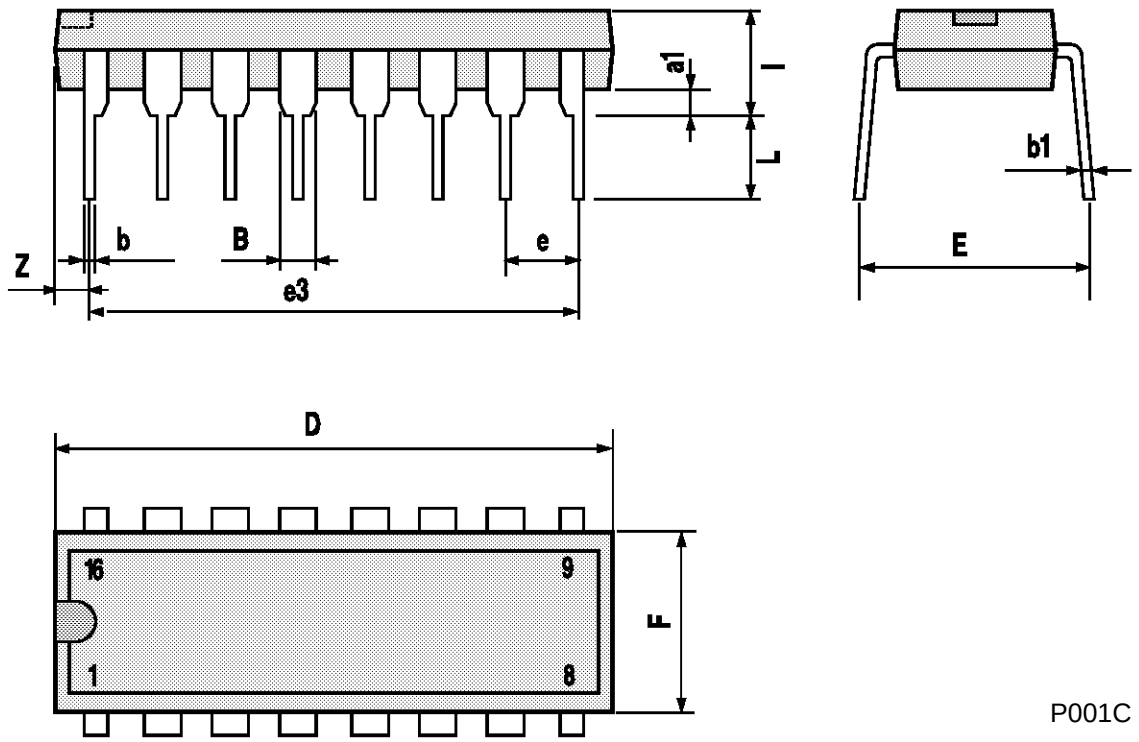

P001C

Ceramic DIP16/1 MECHANICAL DATA

DIM.	mm			inch		
	MIN.	TYP.	MAX.	MIN.	TYP.	MAX.
A			20			0.787
B			7			0.276
D		3.3			0.130	
E	0.38			0.015		
e3		17.78			0.700	
F	2.29		2.79	0.090		0.110
G	0.4		0.55	0.016		0.022
H	1.17		1.52	0.046		0.060
L	0.22		0.31	0.009		0.012
M	0.51		1.27	0.020		0.050
N			10.3			0.406
P	7.8		8.05	0.307		0.317
Q			5.08			0.200

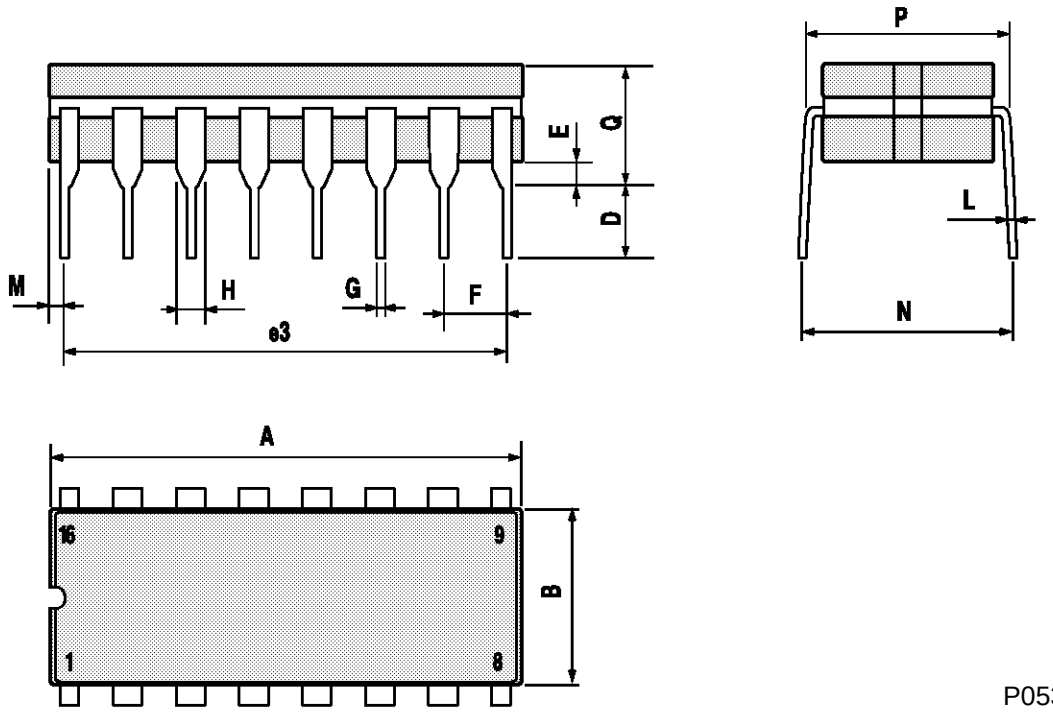

P053D

SO16 (Narrow) MECHANICAL DATA

DIM.	mm			inch		
	MIN.	TYP.	MAX.	MIN.	TYP.	MAX.
A			1.75			0.068
a1	0.1		0.2	0.004		0.007
a2			1.65			0.064
b	0.35		0.46	0.013		0.018
b1	0.19		0.25	0.007		0.010
C		0.5			0.019	
c1	45° (typ.)					
D	9.8		10	0.385		0.393
E	5.8		6.2	0.228		0.244
e		1.27			0.050	
e3		8.89			0.350	
F	3.8		4.0	0.149		0.157
G	4.6		5.3	0.181		0.208
L	0.5		1.27	0.019		0.050
M			0.62			0.024
S	8° (max.)					

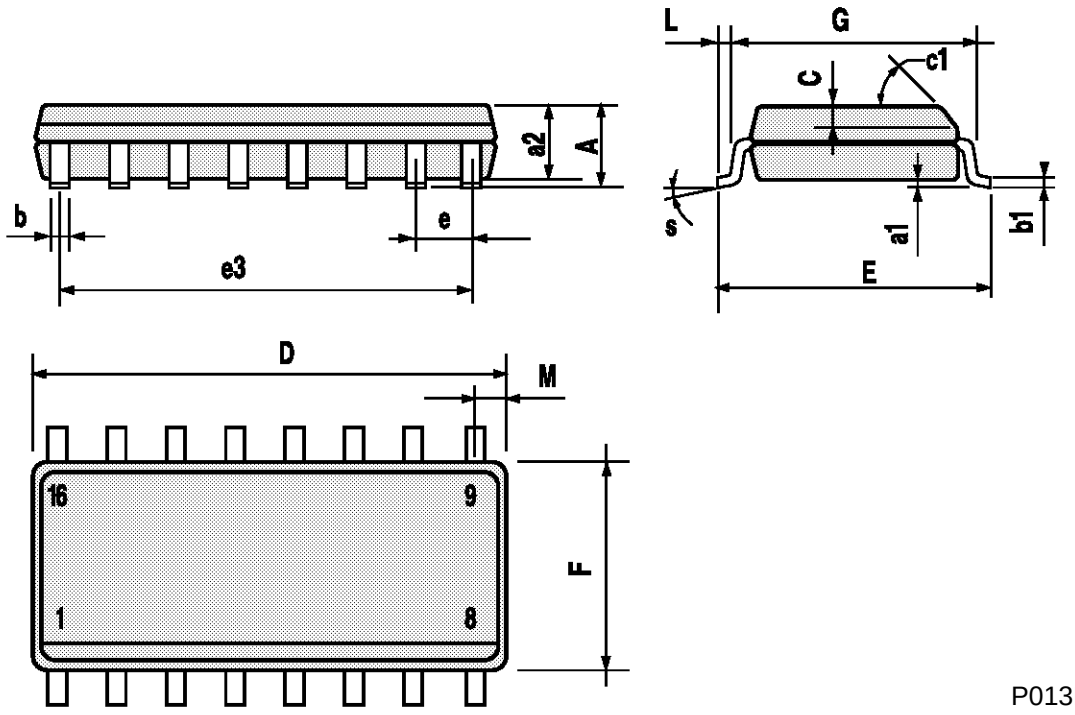

P013H

PLCC20 MECHANICAL DATA

DIM.	mm			inch		
	MIN.	TYP.	MAX.	MIN.	TYP.	MAX.
A	9.78		10.03	0.385		0.395
B	8.89		9.04	0.350		0.356
D	4.2		4.57	0.165		0.180
d1		2.54			0.100	
d2		0.56			0.022	
E	7.37		8.38	0.290		0.330
e		1.27			0.050	
e3		5.08			0.200	
F		0.38			0.015	
G			0.101			0.004
M		1.27			0.050	
M1		1.14			0.045	

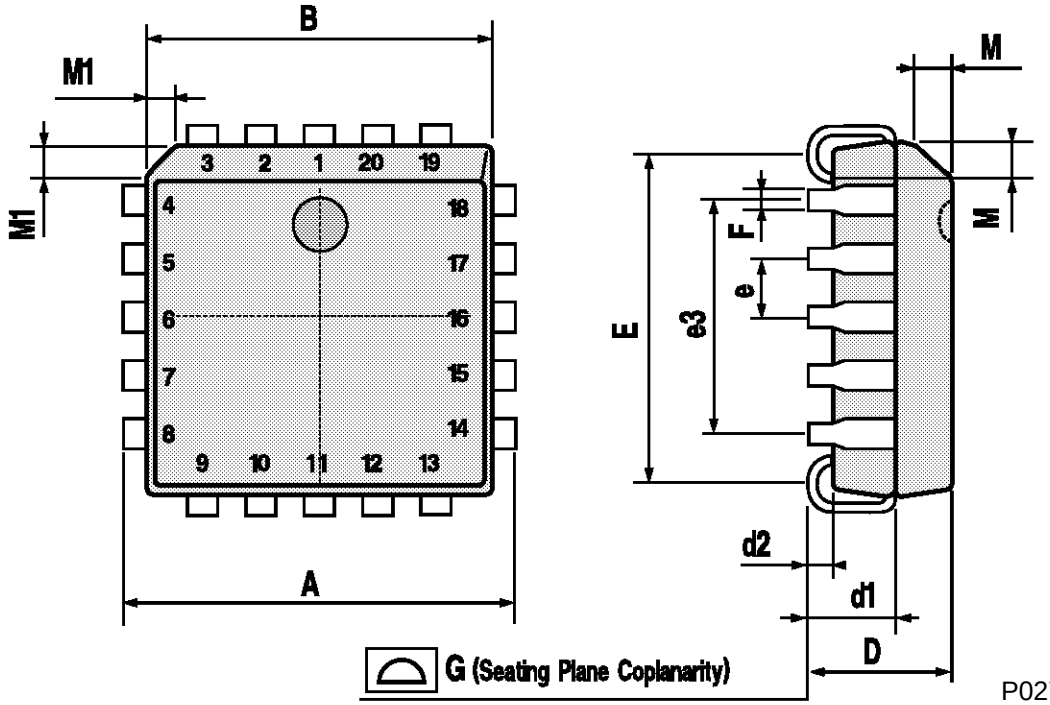

P027A

Information furnished is believed to be accurate and reliable. However, SGS-THOMSON Microelectronics assumes no responsability for the consequences of use of such information nor for any infringement of patents or other rights of third parties which may results from its use. No license is granted by implication or otherwise under any patent or patent rights of SGS-THOMSON Microelectronics. Specifications mentioned in this publication are subject to change without notice. This publication supersedes and replaces all information previously supplied.
SGS-THOMSON Microelectronics products are not authorized for use as critical components in life support devices or systems without express written approval of SGS-THOMSON Microelectonics.

© 1994 SGS-THOMSON Microelectronics - All Rights Reserved

SGS-THOMSON Microelectronics GROUP OF COMPANIES
Australia - Brazil - France - Germany - Hong Kong - Italy - Japan - Korea - Malaysia - Malta - Morocco - The Netherlands - Singapore - Spain - Sweden - Switzerland - Taiwan - Thailand - United Kingdom - U.S.A