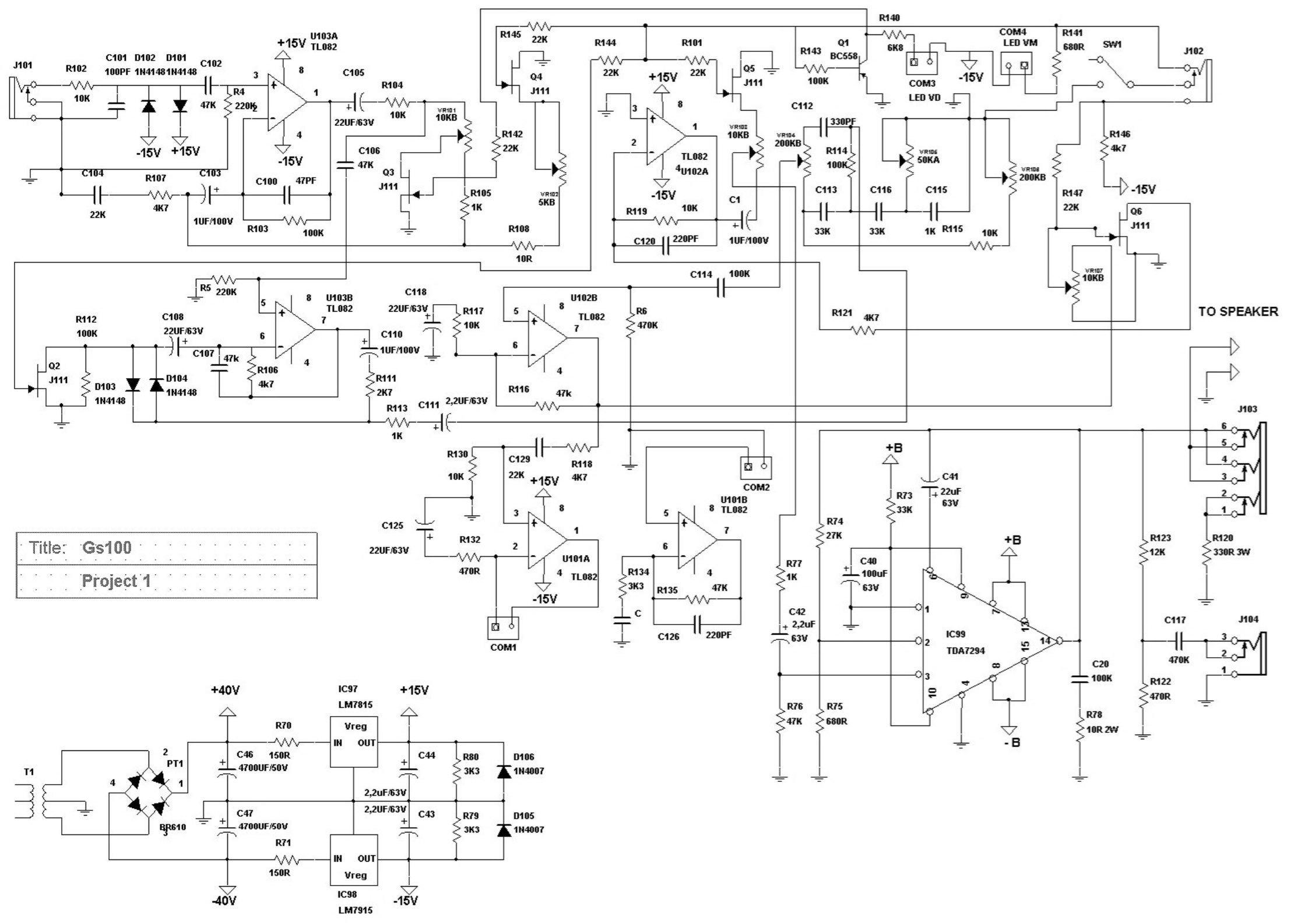
J101
R102
10K
C101
100PF
D102
1N4148
D101
1N4148
C102
47K
R4
220K
+15V
U103A
TL082
-15V
+15V
-15V
C105
22UF/63V
R104
10K
VR101
10KB
C106
47K
Q3
J111
R105
1K
R145
22K
Q4
J111
R142
22K
VR102
5KB
R108
10R
C104
22K
R107
4K7
C103
1UF/100V
C100
47PF
R103
100K
R144
22K
R101
22K
+15V
Q5
J111
TL082
U102A
-15V
VR103
10KB
R119
10K
C120
220PF
C1
1UF/100V
R143
100K
Q1
BC558
R140
6K8
COM3
LED VD
-15V
COM4
LED VM
R141
680R
SW1
J102
C112
330PF
VR104
200KB
R114
100K
VR106
50KA
C113
33K
C116
33K
C115
1K
R115
10K
VR108
200KB
R146
4k7
-15V
R147
22K
Q6
J111
VR107
10KB
TO SPEAKER
R5
220K
U103B
TL082
R112
100K
C108
22UF/63V
C107
47k
R106
4k7
Q2
J111
D103
1N4148
D104
1N4148
C118
22UF/63V
R117
10K
C110
1UF/100V
R111
2K7
R113
1K
C111
2,2UF/63V
U102B
TL082
R116
47k
C114
100K
R6
470K
R121
4K7
J103
R130
10K
C129
22K
R118
4K7
+15V
C125
22UF/63V
R132
470R
U101A
TL082
-15V
COM1
COM2
U101B
TL082
R134
3K3
C
R135
47K
C126
220PF
+B
C41
22uF
63V
R73
33K
R74
27K
C40
100uF
63V
R77
1K
C42
2,2uF
63V
R76
47K
R75
680R
IC99
TDA7294
+B
- B
C20
100K
R78
10R 2W
R123
12K
R122
470R
R120
330R 3W
C117
470K
J104
Title: Gs100
Project 1
+40V
IC97
LM7815
+15V
T1
PT1
BR610
R70
150R
C46
4700UF/50V
C47
4700UF/50V
R71
150R
Vreg
IN
OUT
C44
2,2uF/63V
2,2UF/63V
C43
R80
3K3
R79
3K3
D106
1N4007
D105
1N4007
-40V
IC98
LM7915
-15V