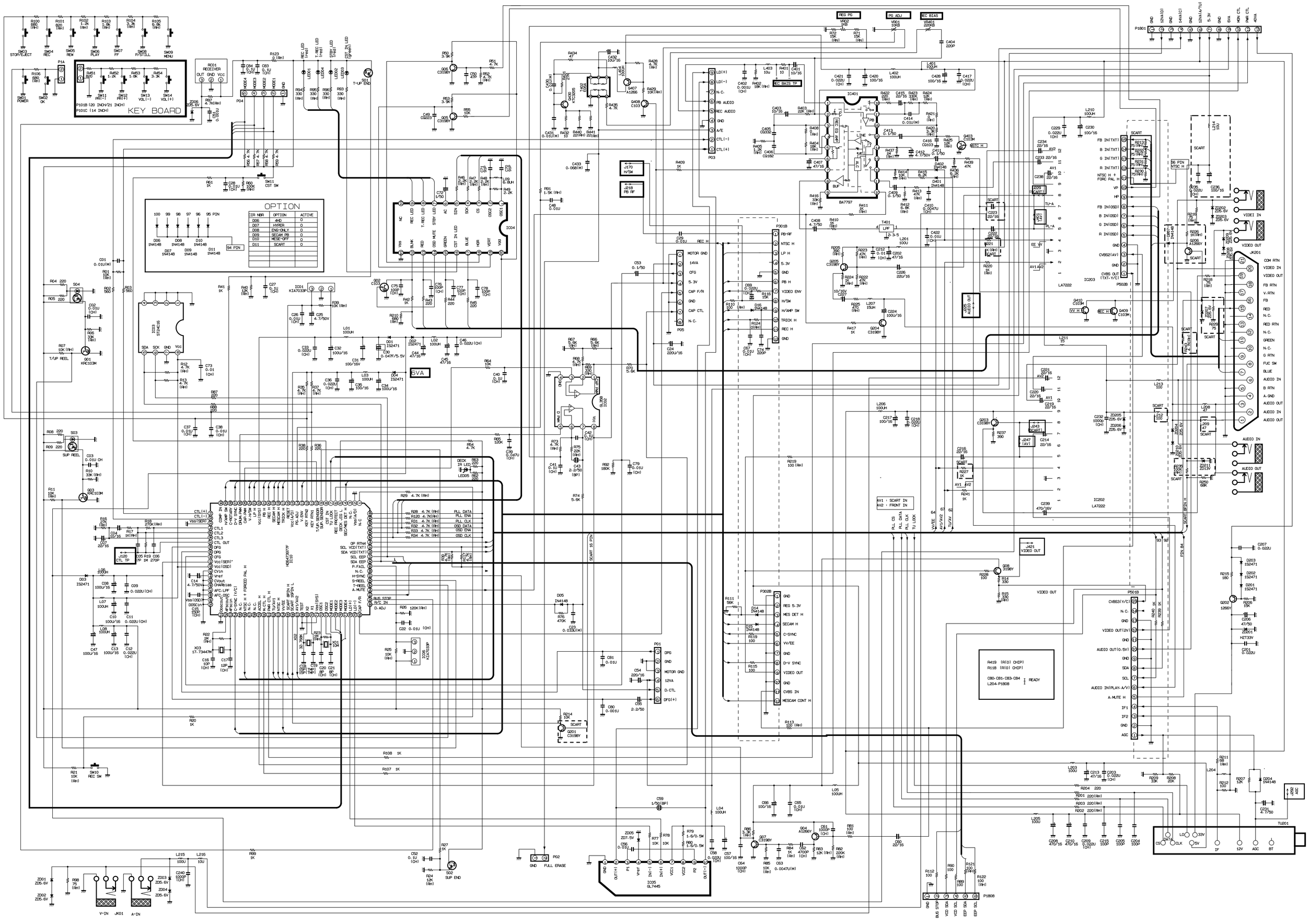
KEY BOARD
OPTION
SVA
SCART
VIDEO IN
VIDEO OUT
AUDIO IN
AUDIO OUT
COM RTN
VIDEO IN
VIDEO OUT
FB RTN
V. RTN
FB
RED
N. C.
RED RTN
GREEN
G RTN
FUC SW
BLUE
AUDIO IN
B RTN
A. GND
AUDIO OUT
AUDIO IN
AUDIO OUT
V-IN
A-IN
SUP REEL
T/UP REEL
REC SW
SUP END
T-UP END
GND
FULL ERASE
VIDEO OUT
R419 (R(0) CHIP)
R418 (R(0) CHIP)
C80-C81-C83-C84
L204-P1808
READY

MV-64A MAIN2 SCHEMATIC DIAGRAM

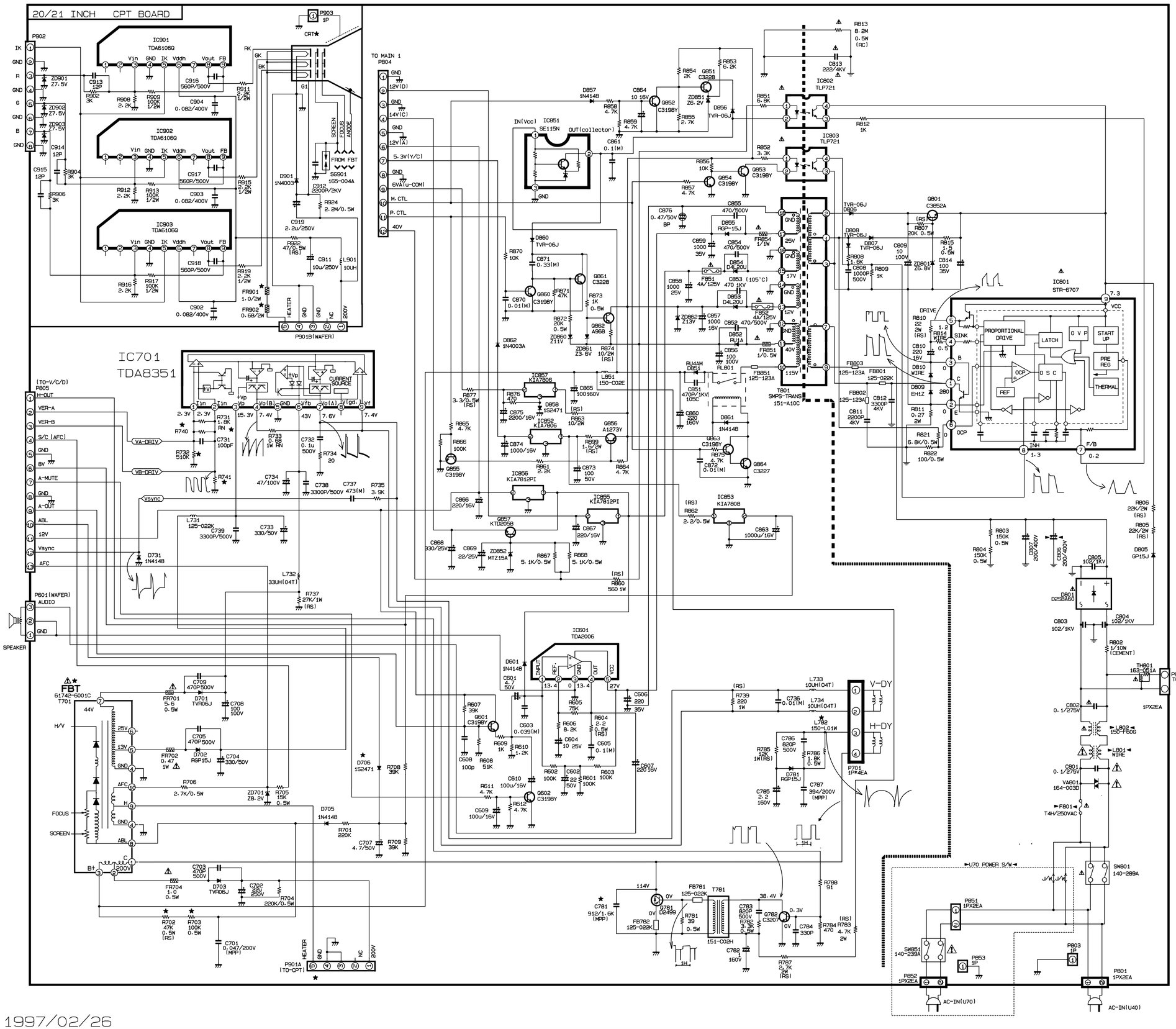

NOTICE

Since this is a basic schematic diagram. The value of components and some partical connection aresubject to change for improvement.

The components marked ⚠ conform to VDE or IEC guidelines and are essential for safe operation of the set. while those marked ⚠ are required for correct operation. Use specified parts only when replacing.

VALUE OF RESISTER. CAPACITOR AND INDUCTOR

1. Resistances are shown in ohm. K = 1.000 M = 1.000.000 .
2. Unless otherwise noted in schematic. all capacitor values less than 1 are expresses in mfd and the values more than 1 in pF
3. Unless otherwise noted in schematic. all coil values more than 1 are expressed in uH. and the values less than 1 in H.

OBSERVATION OF VOLTAGES AND WAVEFORMS

1. Voltages read with VTVM from point shown to chassis ground. line voltages 220 Volts. colour bar signal
2. Voltages reading may very ±20%.
3. The schematic shown is representative only.
4. All waveforms are taken using a wide band oscilloscope and a low capacity probe.
5. Check FINE TUNING. AGC. BRIGHTNESS. CONTRAST and COLOUR controls for best picture. make sure that CONTRAST and COLOUR controls are in mid position and BRIGHTNESS controls is almost in maximum position.
6. Waveforms are takrn using a standard colour bar signal.

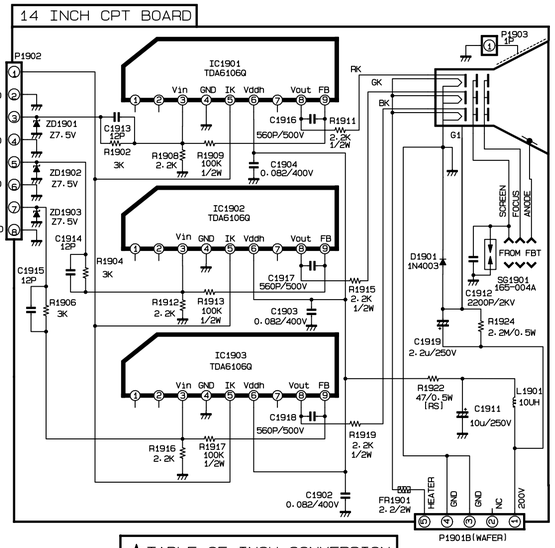

★TABLE OF INCH CONVERSION

NO	CIRCUIT NO	INCH 21"	INCH 20"	INCH 14"	REMARK
1	R731	1.8K	1.5K	2.7K	RESISTOR. RN 1/6W
2	R732	510K	390K	-	RESISTOR. RD 1/6W
3	R740	-	-	2.7K	RESISTOR. RN 1/6W
4	R741	-	-	820K	RESISTOR. RD 1/6W
5	R702	47K	47K	47K	RESISTOR. RS 0.5W
6	R703	100K	100K	130K	RESISTOR. RD 0.5W
7	FR901	1	0.68	-	RESISTOR. RF 2W
8	FR902	0.68	0.68	2.2	RESISTOR. RF 2W
9	C781	0.0091u	0.0091u	0.0086u	CAPACITOR. MPP 1.6K
10	C787	0.43u	0.39u	0.62u	CAPACITOR. MPP 200V
11	L782	-L01W	-L02C	-L01W	COIL. LINEARITY(150-)
12	D706	1S2471	1S2471	TIN WIRE	DIODE
13	T701	-6001C	-6001C	-6001E	FBT (6174Z-)
14	P901A	-A05C	-A05C	-A05B	CONNECTOR. 5P(387-)
15		6620VBC001A	6620VBC001A	381-100F	CPT SOCKET
16		-852C	-852C	-852B	CPT EARTH LEAD(170-)
17					CPT BOARD
18					

►TABLE OF POWER CONVERSION◄

NO	CIRCUIT NO	RANGE WIDE(100-270V)	RANGE NARROW(230V)	REMARK
1	F801	TIME LAG	HBC	FUSE
2	L802	150-F06G	150-F06H	LINE FILTER
3	L801	TIN WIRE	TIN WIRE	LINE FILTER
4	C806	200u/400V	-	CAPACITOR ELEC
5				
6				
7				
8				

1997/02/26

MV-64A VCD SCHEMATIC DIAGRAM

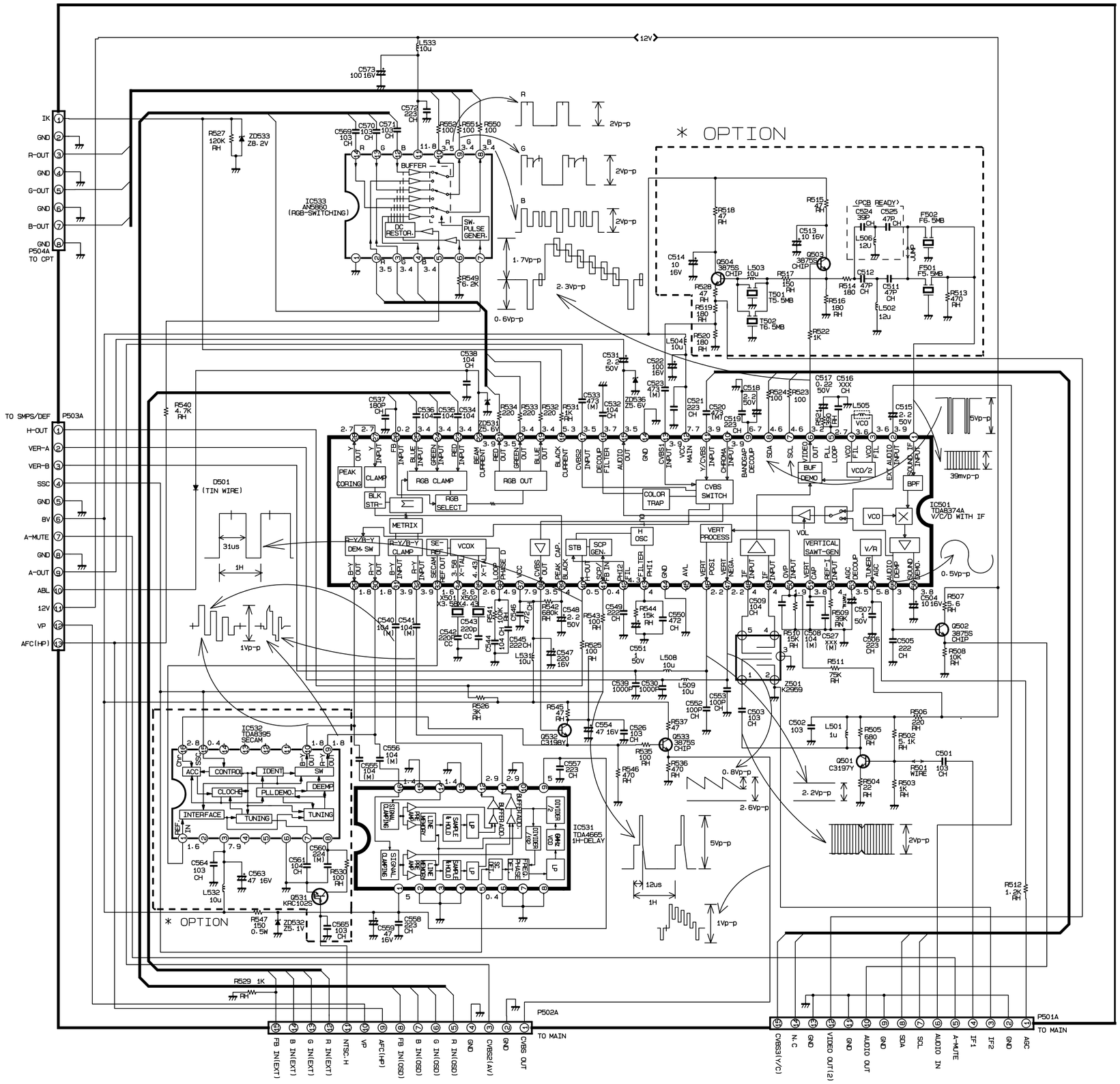

NOTICE
Since this is a basic schematic diagram.
The value of components and some partical connection aresubject to change for improvement.

The components marked ⚠ conform to VDE or IEC guidelines and are essential for safe operation of the set. while those marked ⚠ are required for correct operation. Use specified parts only when replacing.

VALUE OF RESISTER. CAPACITOR AND INDUCTOR

1. Resistances are shown in ohm. K = 1.000 M = 1.000.000 .
2. Unless otherwise noted in schematic. all capacitor values less than 1 are expresses in mfd and the values more than 1 in pF
3. Unless otherwise noted in schematic. all coil values more . than 1 are expressed in uH. and the values less than 1 in H.

OBSERVATION OF VOLTAGES AND WAVEFORMS

1. Voltages read with VTVM from point shown to chassis ground. line voltages 220 Volts. colour bar signal
2. Voltages reading may very ±20%.
3. The schematic shown is representative only.
4. All waveforms are taken using a wide band oscilloscope and a low capacity probe.
5. Check FINE TUNING. AGC. BRIGHTNESS. CONTRAST and COLOUR controls for best picture. make sure that CONTRAST and COLOUR controls are in mid position and BRIGHTNESS controls is almost in maximum position.
6. Waveforms are takrn using a standard colour bar signal.

★ TABLE OF SYSTEM CONVERSION(OPTION)

NO	CIRCUIT NO	SYSTEM			REMARK
		FULL	PAL-I/I		
1	IC532	O	-		IC. TDA8395
2	T501	T 5.5MB	T 6.0MB		FILTER. TRAP
3	T502	T 6.5MB	-		FILTER. TRAP
4	F501	F 5.5MC	F 6.0MC		FILTER. BPF
5	F502	F 6.5MC	—		FILTER. BPF
6	L502	12u			INDUCTOR
7	L503	10u			INDUCTOR
8	L532	10u	—		INDUCTOR
9	C560	224	—		CAPACITOR. MYLAR
10	C561	104	—		CAPACITOR. CHIP
11	C563	47u	—		CAPACITOR. ELEC 16V
12	C564	103	—		CAPACITOR. CHIP
13	C565	103	—		CAPACITOR. CHIP
14	R530	100	—		RESISTOR. CHIP
15	Q531	KRC102S	—		TRANSISTOR. CHIP
16					