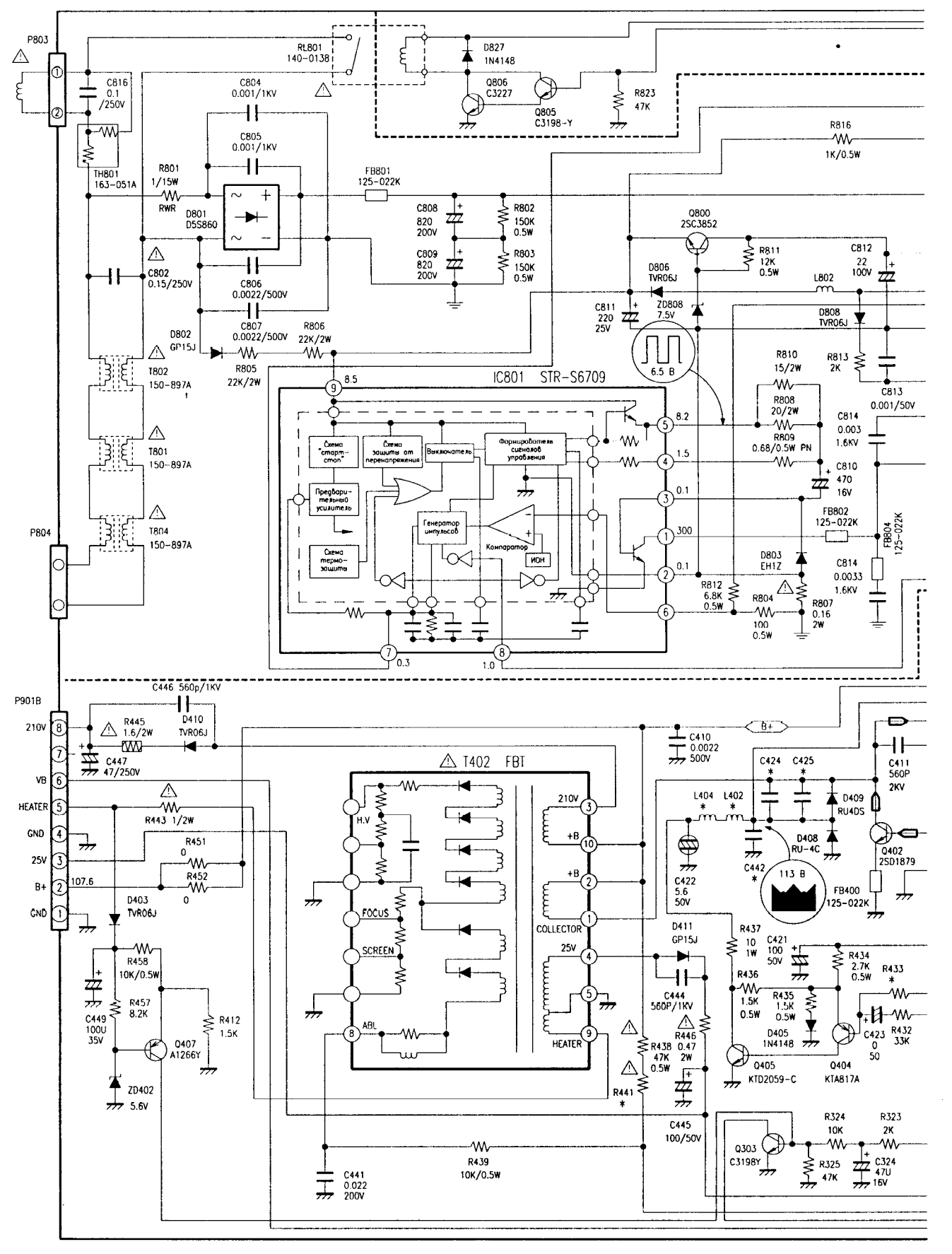
P803
C816 0.1 /250V
TH801 163-051A
RL801 140-0138
D827 1N4148
Q806 C3227
Q805 C3198-Y
R823 47K
C804 0.001/1KV
C805 0.001/1KV
R801 1/15W
RWR
D801 D5S860
FB801 125-022K
C808 820 200V
C809 820 200V
R802 150K 0.5W
R803 150K 0.5W
R816 1K/0.5W
Q800 2SC3852
R811 12K 0.5W
C812 22 100V
L802
D806 TVR06J
C811 220 25V
ZD808 7.5V
D808 TVR06J
C802 0.15/250V
C806 0.0022/500V
C807 0.0022/500V
D802 GP15J
R805 22K/2W
R806 22K/2W
6.5 B
R810 15/2W
R813 2K
C813 0.001/50V
T802 150-897A
T801 150-897A
T804 150-897A
IC801 STR-S6709
Схема "старт-стоп"
Схема защиты от перенапряжения
Выключатель
Формирователи сигналов управления
Предварительный усилитель
Генератор импульсов
Компаратор
ИОН
Схема термо-защита
R808 20/2W
R809 0.68/0.5W PN
C814 0.003 1.6KV
C810 470 16V
FB802 125-022K
FB804 125-022K
D803 EH1Z
C814 0.0033 1.6KV
R812 6.8K 0.5W
R804 100 0.5W
R807 0.16 2W
P804
P901B
210V
VB
HEATER
GND
25V
B+
GND
C446 560p/1KV
R445 1.6/2W
D410 TVR06J
C447 47/250V
R443 1/2W
R451 0
R452 0
107.6
D403 TVR06J
R458 10K/0.5W
R457 8.2K
C449 100U 35V
Q407 A1266Y
ZD402 5.6V
R412 1.5K
T402 FBT
H.V
FOCUS
SCREEN
ABL
COLLECTOR
HEATER
C410 0.0022 500V
B+
C424 *
C425 *
C411 560P 2KV
L404 *
L402 *
D409 RU4DS
D408 RU-4C
Q402 2SD1879
C422 5.6 50V
C442 *
113 B
FB400 125-022K
D411 GP15J
R437 10 1W
C421 100 50V
R434 2.7K 0.5W
R433 *
R436 1.5K 0.5W
R435 1.5K 0.5W
C444 560P/1KV
R446 0.47 2W
D405 1N4148
C423 0 50
R432 33K
R438 47K 0.5W
Q405 KTD2059-C
Q404 KTA817A
R441 *
C445 100/50V
R324 10K
R323 2K
Q303 C3198Y
R325 47K
C324 47U 16V
R439 10K/0.5W
C441 0.022 200V

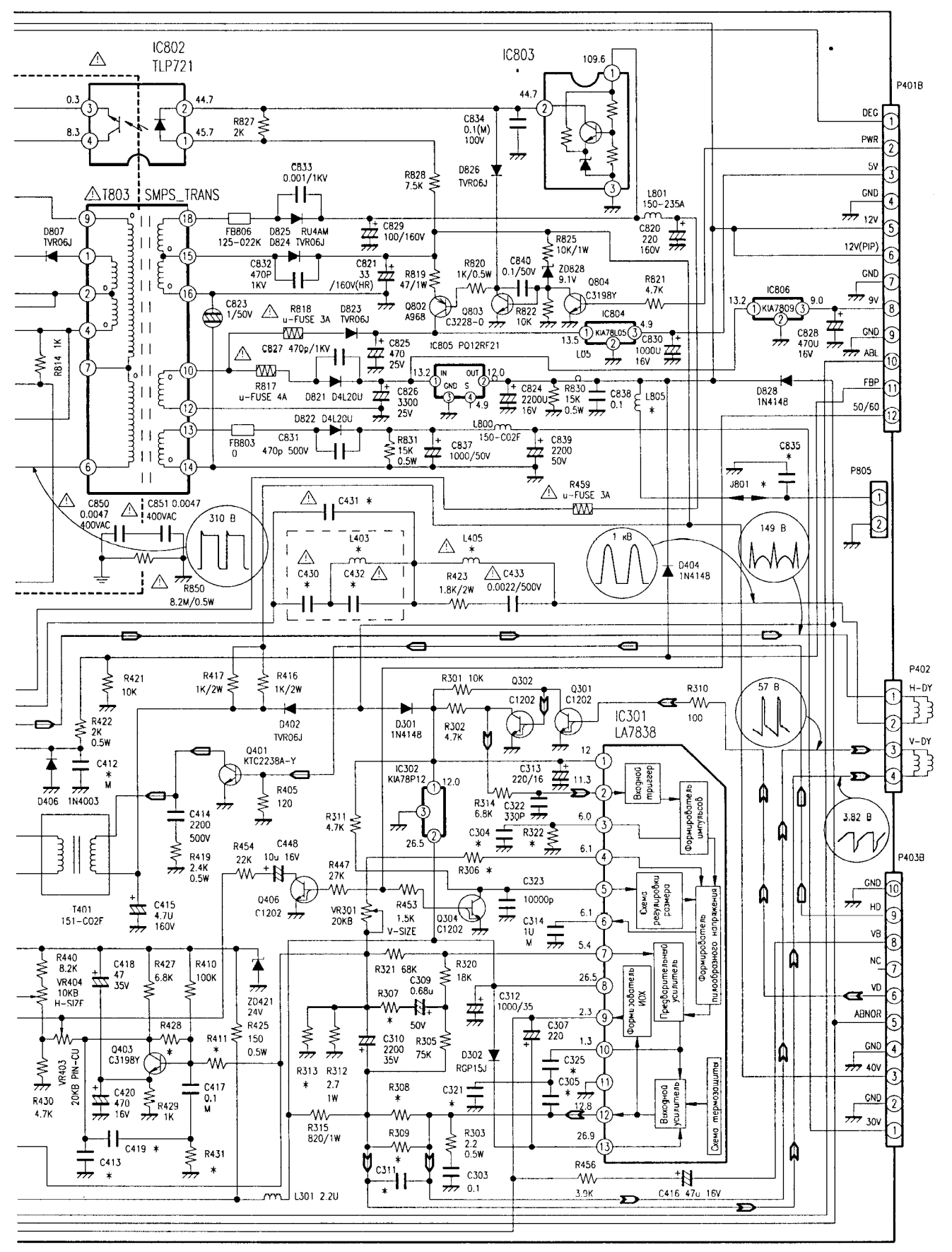
IC802
TLP721
IC803
T803 SMPS_TRANS
P401B
DEG
PWR
5V
GND
12V
12V(PIP)
GND
9V
GND
ABL
FBP
50/60
P805
P402
H-DY
V-DY
P403B
GND
HD
VB
NC
VD
ABNOR
GND
40V
GND
30V
IC301
LA7838
Входной триггер
Формирователь импульсов
Схема регулировки размера
Формирователь синхронизации
Формирователь ИОХ
Предварительный усилитель
Входной усилитель
Схема мерцания
IC806
KIA7809
IC804
KIA78L05
IC805 PQ12RF21
IC302
KIA78P12
T401
151-C02F
L801
150-235A
L800
150-C02F
L805
L301 2.2U
L403
L405
VR301
20KB
V-SIZE
VR403
20KB PIN-CU
VR404
10KB
H-SIZE
310 В
1 кВ
149 В
57 В
3.82 В

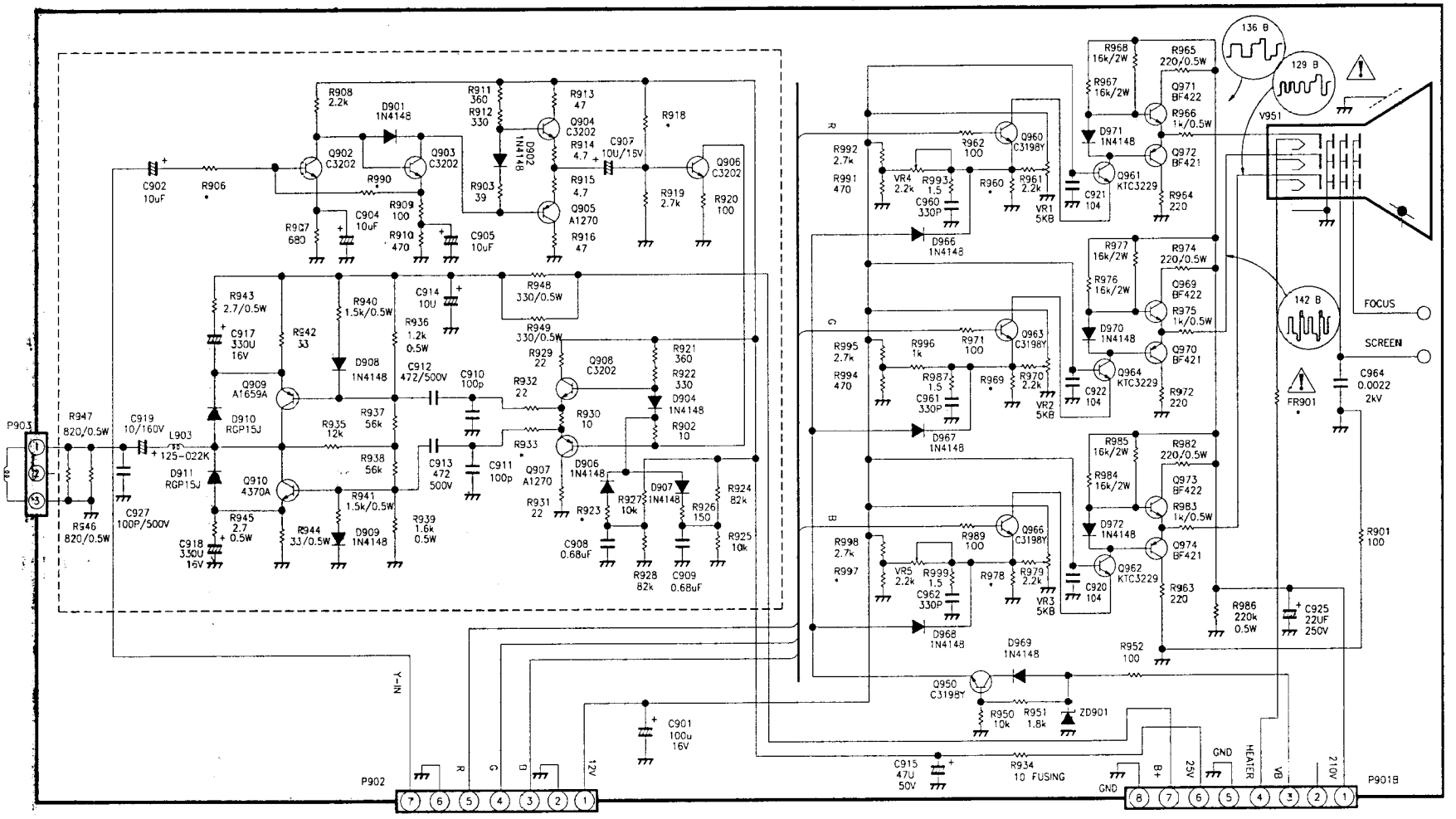
R908 2.2k
D901 1N4148
R911 360
R912 330
R913 47
Q904 C3202
R914 4.7
C907 10U/15V
R918
Q902 C3202
Q903 C3202
D902 1N4148
R903 39
R915 4.7
Q905 A1270
R916 47
Q906 C3202
R919 2.7k
R920 100
C902 10uF
R906
R990
R909 100
R927 680
C904 10uF
R910 470
C905 10uF
R943 2.7/0.5W
C917 330U 16V
R942 33
R940 1.5k/0.5W
C914 10U
R948 330/0.5W
R936 1.2k 0.5W
R949 330/0.5W
R929 22
Q908 C3202
R921 360
R922 330
D904 1N4148
R902 10
Q909 A1659A
D908 1N4148
C912 472/500V
C910 100p
R932 22
R930 10
D910 RGP15J
R935 12k
R937 56k
R933
P903
R947 820/0.5W
C919 10/160V
L903 125-022K
D911 RGP15J
R938 56k
C913 472 500V
C911 100p
Q907 A1270
D906 1N4148
Q910 4370A
R941 1.5k/0.5W
R931 22
R923
D907 1N4148
R926 150
R924 82k
R925 10k
R946 820/0.5W
C927 100P/500V
R945 2.7 0.5W
R944 33/0.5W
D909 1N4148
R939 1.6k 0.5W
C908 0.68uF
R928 82k
C909 0.68uF
C918 330U 16V
R968 16k/2W
R965 220/0.5W
R967 16k/2W
Q971 BF422
R966 1k/0.5W
136 B
129 B
V951
R992 2.7k
R962 100
Q960 C3198Y
D971 1N4148
Q972 BF421
R991 470
VR4 2.2k
R993 1.5
R960
R961 2.2k
VR1 5KB
Q961 KTC3229
C921 104
R964 220
C960 330P
D966 1N4148
R977 16k/2W
R974 220/0.5W
R976 16k/2W
Q969 BF422
R975 1k/0.5W
142 B
FOCUS
D970 1N4148
Q970 BF421
SCREEN
R995 2.7k
R996 1k
R971 100
Q963 C3198Y
Q964 KTC3229
R994 470
R987 1.5
R969
R970 2.2k
VR2 5KB
C922 104
R972 220
C964 0.0022 2kV
C961 330P
D967 1N4148
FR901
R985 16k/2W
R982 220/0.5W
R984 16k/2W
Q973 BF422
R983 1k/0.5W
D972 1N4148
Q974 BF421
R998 2.7k
R989 100
Q966 C3198Y
Q962 KTC3229
R997
VR5 2.2k
R999 1.5
R978
R979 2.2k
VR3 5KB
C920 104
R963 220
R986 220k 0.5W
C925 22UF 250V
R901 100
C962 330P
D968 1N4148
D969 1N4148
R952 100
Q950 C3198Y
R950 10k
R951 1.8k
ZD901
Y-IN
C901 100u 16V
C915 47U 50V
R934 10 FUSING
P902
R
G
B
12V
GND
B+
25V
HEATER
VB
210V
P901B

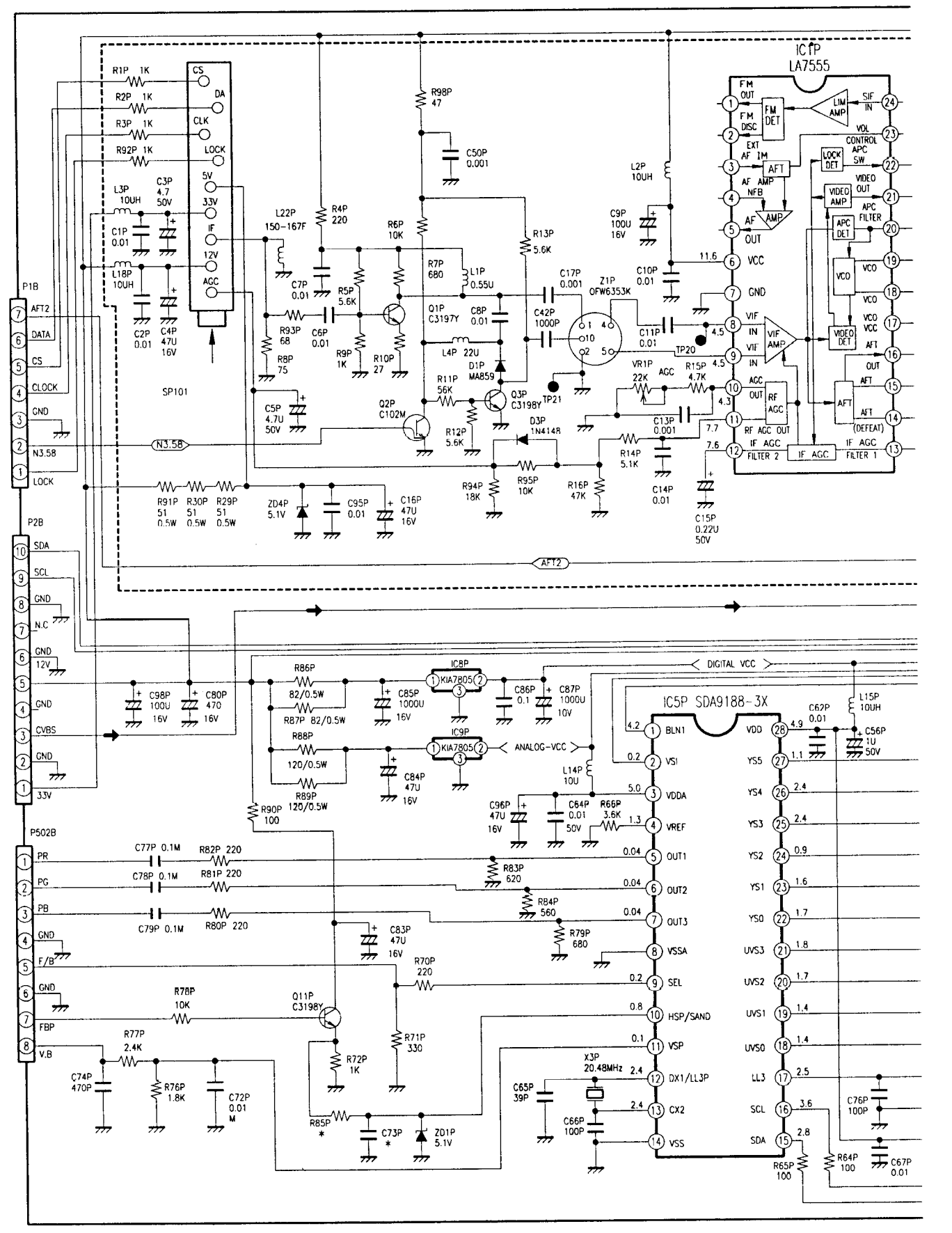
IC1P
LA7555
FM OUT
FM DISC
FM DET
LIM AMP
SIF IN
VOL CONTROL
APC SW
LOCK DET
EXT AF
AFT
AF AMP NFB
AF OUT
AMP
VIDEO AMP
VIDEO OUT
APC FILTER
APC DET
VCC
GND
VCO
VIF IN
VIF AMP
VIDEO DET
AGC OUT
RF AGC
AFT
RF AGC OUT
IF AGC FILTER 2
IF AGC
IF AGC FILTER 1
(DEFEAT)
CS
DA
CLK
LOCK
5V
33V
IF
12V
AGC
SP101
P1B
AFT2
DATA
CS
CLOCK
GND
N3.58
LOCK
P2B
SDA
SCL
GND
N.C
GND
12V
GND
CVBS
GND
33V
P502B
PR
PG
PB
GND
F/B
GND
FBP
V.B
DIGITAL VCC
ANALOG-VCC
IC8P
KIA7805
IC9P
KIA7805
IC5P SDA9188-3X
BLN1
VSI
VDDA
VREF
OUT1
OUT2
OUT3
VSSA
SEL
HSP/SAND
VSP
DX1/LL3P
CX2
VSS
VDD
YS5
YS4
YS3
YS2
YS1
YS0
UVS3
UVS2
UVS1
UVS0
LL3
SCL
SDA
X3P 20.48MHz
Q1P C3197Y
Q2P C102M
Q3P C3198Y
Q11P C3198Y
Z1P OFW6353K
D1P MA859
D3P 1N4148
ZD4P 5.1V
ZD1P 5.1V
TP20
TP21
L1P 0.55U
L4P 22U
L22P 150-167F
L2P 10UH
L3P 10UH
L18P 10UH
L14P 10U
L15P 10UH
VR1P 22K
AGC
R98P 47
C50P 0.001
R4P 220
R6P 10K
R7P 680
R13P 5.6K
C17P 0.001
C42P 1000P
C8P 0.01
C9P 100U 16V
C10P 0.01
C11P 0.01
C13P 0.001
C14P 0.01
C15P 0.22U 50V
R15P 4.7K
R14P 5.1K
R16P 47K
R95P 10K
R94P 18K
R12P 5.6K
R11P 56K
R10P 27
R9P 1K
R5P 5.6K
C7P 0.01
C6P 0.01
R93P 68
R8P 75
C5P 4.7U 50V
R91P 51 0.5W
R30P 51 0.5W
R29P 51 0.5W
C95P 0.01
C16P 47U 16V
R1P 1K
R2P 1K
R3P 1K
R92P 1K
C3P 4.7 50V
C1P 0.01
C2P 0.01
C4P 47U 16V
C98P 100U 16V
C80P 470 16V
R86P 82/0.5W
R87P 82/0.5W
R88P 120/0.5W
R89P 120/0.5W
C85P 1000U 16V
C86P 0.1
C87P 1000U 10V
C84P 47U 16V
R90P 100
C96P 47U 16V
C64P 0.01 50V
R66P 3.6K
C62P 0.01
C56P 1U 50V
C77P 0.1M
C78P 0.1M
C79P 0.1M
R82P 220
R81P 220
R80P 220
R83P 620
R84P 560
R79P 680
C83P 47U 16V
R70P 220
R78P 10K
R77P 2.4K
R71P 330
R72P 1K
R85P *
C73P *
C74P 470P
R76P 1.8K
C72P 0.01 M
C65P 39P
C66P 100P
C76P 100P
C67P 0.01
R64P 100
R65P 100
AFT2

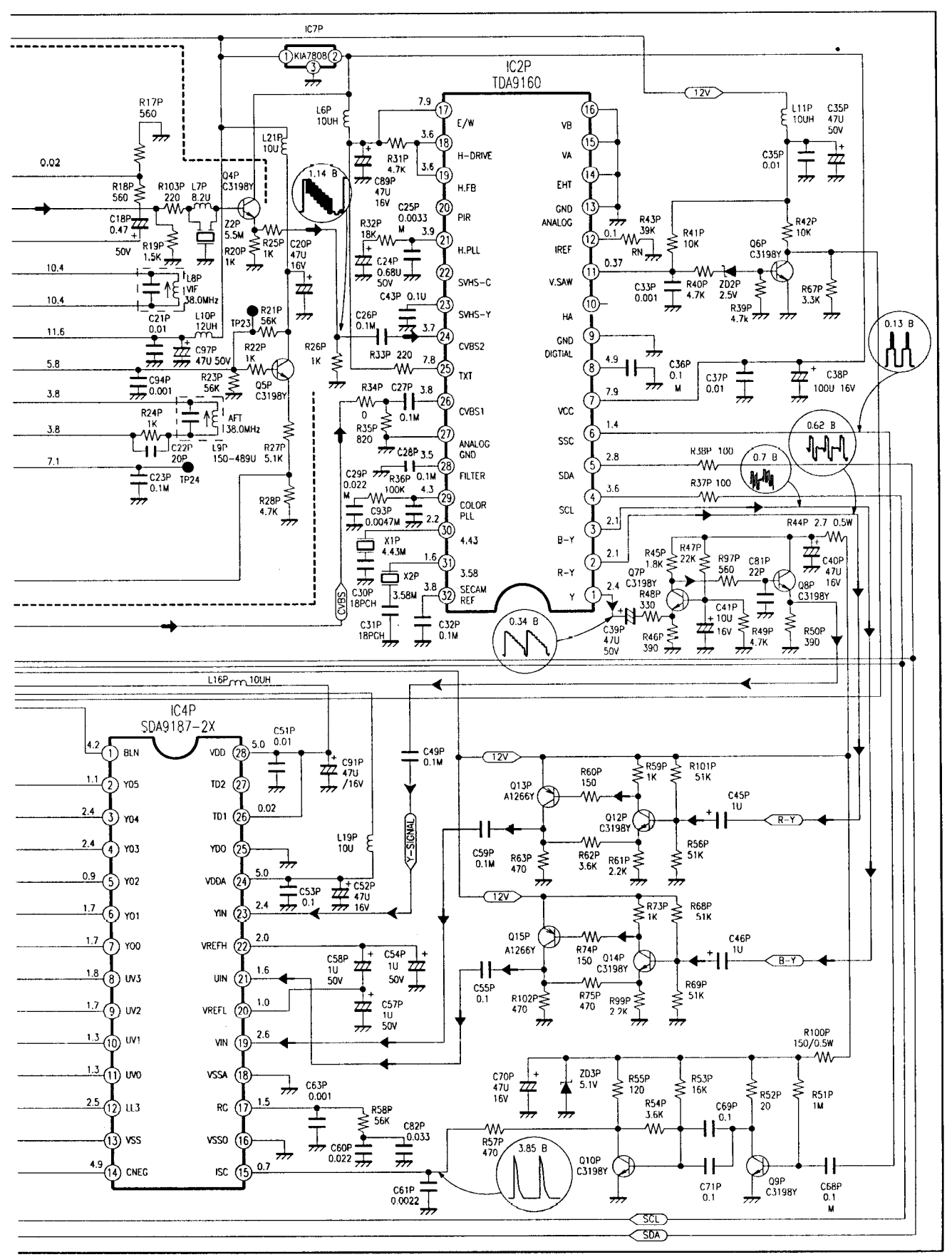
IC7P
KIA7808
IC2P
TDA9160
E/W
H-DRIVE
H.FB
PIR
H.PLL
SVHS-C
SVHS-Y
CVBS2
TXT
CVBS1
ANALOG GND
FILTER
COLOR PLL
4.43
3.58
SECAM REF
VB
VA
EHT
GND ANALOG
IREF
V.SAW
HA
GND DIGTIAL
VCC
SSC
SDA
SCL
B-Y
R-Y
Y
12V
CVBS
IC4P
SDA9187-2X
BLN
Y05
Y04
Y03
Y02
Y01
Y00
UV3
UV2
UV1
UV0
LL3
VSS
CNEG
VDD
TD2
TD1
YDO
VDDA
YIN
VREFH
UIN
VREFL
VIN
VSSA
RC
VSSO
ISC
Y-SIGNAL
R-Y
B-Y
SCL
SDA