Service Manual

PIONEER®
The Art of Entertainment

KEH-P6600R/EW

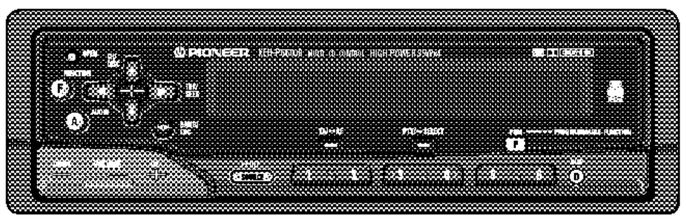

ORDER NO.
CRT2021

MULTI-CD CONTROL HIGH POWER CASSETTE PLAYER WITH RDS TUNER

KEH-P6600R EW

MULTI-CD CONTROL CASSETTE PLAYER WITH RDS TUNER

KEX-P66R EW

NOTE:

- **See the separate manual CX-631(CRT1640) for the cassette mechanism description.**
- **The cassette mechanism assy employed in this model is one of X-2L series**
- **Dolby noise reduction manufactured under license from Dolby Laboratories Licensing Corporation. "Dolby" and the double-D symbol are trademarks of Dolby Laboratories Licensing Corporation.**
- **This service manual does not describe the CD test mode.**
  For the operations in the CD test mode, refer to the CD player's Service Manual.

CONTENTS

1. SAFETY INFORMATION 1
2. EXPLODED VIEWS AND PARTS LIST 2
3. SCHEMATIC DIAGRAM 10
4. PCB CONNECTION DIAGRAM 22
5. ELECTRICAL PARTS LIST 32
6. ADJUSTMENT.....39
7. GENERAL INFORMATION 41
   7.1 PARTS.....41
      7.1.1 IC.....41
      7.1.2 DISPLAY 46
   7.2 DISASSEMBLY.....47
   7.3 BLOCK DIAGRAM.....48
8. OPERATIONS AND SPECIFICATIONS.....50

1. SAFETY INFORMATION

This service manual is intended for qualified service technicians; it is not meant for the casual do-it-yourselfer. Qualified technicians have the necessary test equipment and tools, and have been trained to properly and safely repair complex products such as those covered by this manual.
Improperly performed repairs can adversely affect the safety and reliability of the product and may void the warranty. If you are not qualified to perform the repair of this product properly and safely, you should mot risk trying to do so and refer the repair to a qualified service technician.

PIONEER ELECTRONIC CORPORATION 4-1, Meguro 1-Chome, Meguro-ku, Tokyo 153, Japan
PIONEER ELECTRONICS SERVICE INC. P.O.Box 1760, Long Beach, CA 90801-1760 U.S.A.
PIONEER ELECTRONIC [EUROPE] N.V. Haven 1087 Keetberglaan 1, 9120 Melsele, Belgium
PIONEER ELECTRONICS ASIACENTRE PTE.LTD. 501 Orchard Road, #10-00, Lane Crawford Place, Singapore 0923

© PIONEER ELECTRONIC CORPORATION 1997

K-FEB. MAY 1997 Printed in Belgium

2.2 EXTERIOR

● KEH-P6600R/EW

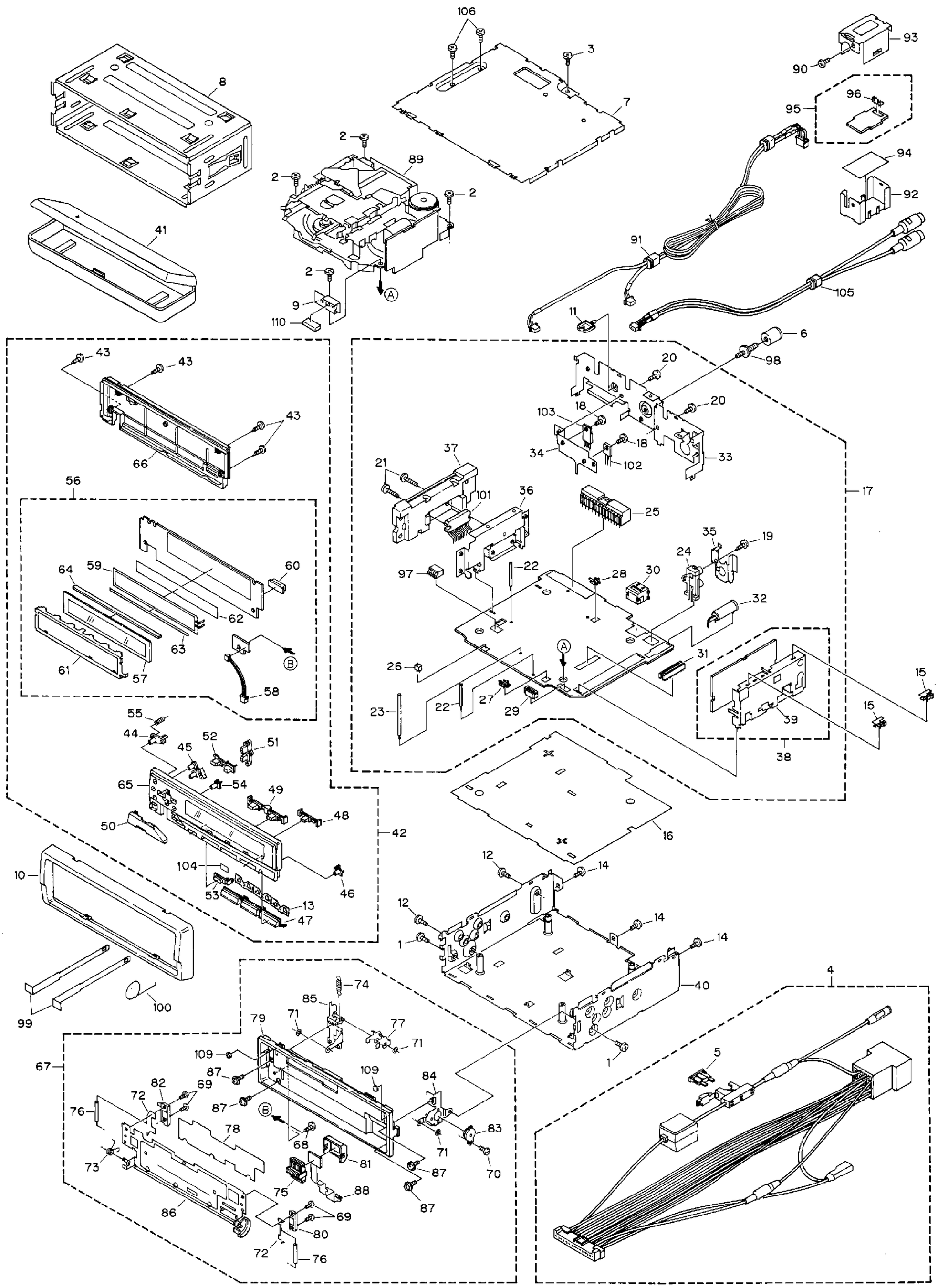

Fig. 3

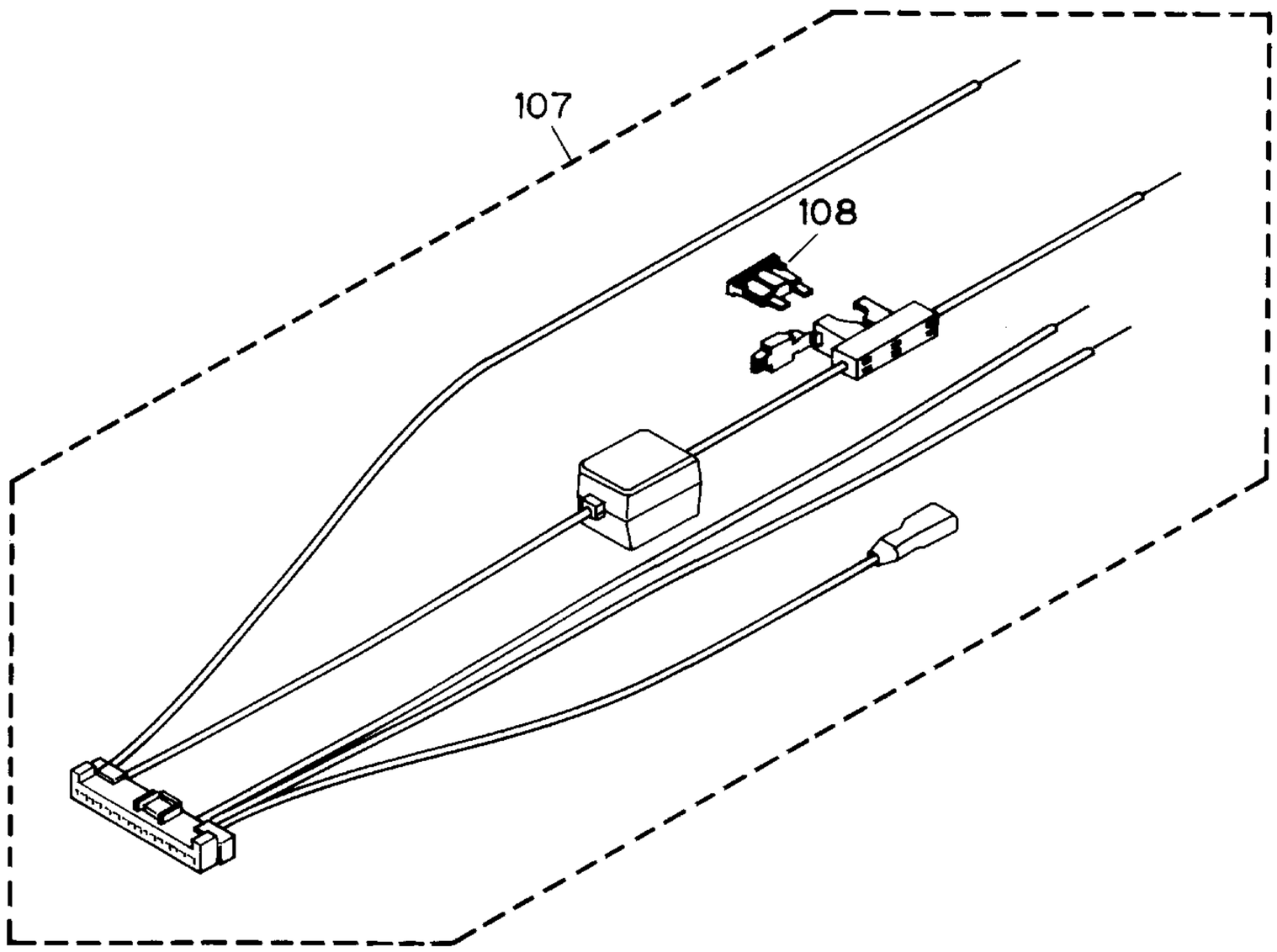

Fig. 4

● Parts List

Mark No.	Description	Part No. KEH-P6600R/EW	Part No. KEX-P66R/EW
1	Screw	BMZ30P040FMC	BMZ30P040FMC
2	Screw	BSZ26P050FMC	BSZ26P050FMC
3	Screw	BSZ30P050FMC	BSZ30P050FMC
4	Cord Assy	CDE5320	•••••
5	Fuse(10A)	CEK1136	•••••
6	Bush	CNV1009	CNV1009
7	Case	CNB2224	CNB2201
8	Holder	CNC6798	CNC6798
9	Shield	CNC7365	CNC7365
10	Panel	CNS4447	CNS4553
11	Clamper	CNV1343	CNV1343
12	Screw	BMZ30P080FMC	•••••
13	Spacer	CNM5524	CNM5524
14	Screw	BSZ30P050FMC	BSZ30P050FMC
15	Holder	CNC5704	CNC5704
16	Insulator	CNM5248	CNM5248
17	Tuner Amp Unit	CWM5318	CWM5442
18	Screw	BMZ26P060FMC	BMZ26P060FMC
19	Screw	BPZ26P060FMC	BPZ26P060FMC
20	Screw	BSZ26P050FMC	BSZ26P050FMC
21	Screw	BSZ26P140FMC	•••••
22	Clamper	CEF1005	CEF1005
23	Clamper	CEF1009	CEF1009
24	Pin Jack(CN351)	CKB1028	CKB1033
25	Plug(CN601)	CKM1231	CKM1231

Mark No.	Description	Part No. KEH-P6600R/EW	Part No. KEX-P66R/EW
26	Plug(CN644)	CKS-783	CKS-783
27	Plug(CN641)	CKS1236	CKS1236
28	Plug(CN642)	CKS1236	CKS1236
29	Connector(CN643)	CKS1499	CKS1499
30	Connector(CN281)	CKS3408	CKS3408
31	Connector(CN671)	CKS3568	CKS3568
32	Antenna Jack(CN402)	CKX1056	CKX1056
33	Panel	CNB2168	CNB2167
34	Holder	CNC6420	CNC6420
35	Holder	CNC6531	CNC6531
36	Holder	CNC6674	•••••
37	Heat Sink	CNR1426	•••••
38	FM/AM Tuner Unit	CWE1416	CWE1416
39	Holder	CNC6555	CNC6555
40	Chassis Unit	CXB1210	CXB1461
41	Case Assy	CXA7194	CXA7194
42	Detach Grille Assy	CXB1444	CXB1446
43	Screw	BPZ20P080FZK	BPZ20P080FZK
44	Button(OPEN)	CAC4971	CAC4971
45	Button(F,A)	CAC4972	CAC4972
46	Button(D)	CAC5341	CAC5341
47	Button(1-6)	CAC5083	CAC5382
48	Button(PGM)	CAC5084	CAC5084
49	Button(PTY,TA)	CAC5085	CAC5085
50	Button(Vol+,Vol-)	CAC5086	CAC5380
51	Button(▲,▼)	CAC5087	CAC5203
52	Button(◄,►)	CAC5088	CAC5204
53	Button(SOURCE)	CAC5089	CAC5207
54	Button(◁▷)	CAC5222	CAC5222
55	Spring	CBH1844	CBH1844
56	Keyboard Unit	CWM5348	CWM5451
57	LCD(LCD901)	CAW1422	CAW1422
58	Cord	CDE4387	CDE4387
59	EL(CN902)	CEL1502	CEL1502
60	Connector(CN901)	CKS2733	CKS2733
61	Holder	CNC7024	CNC7024
62	Tape	CNM5317	CNM5317
63	Spacer	CNM5380	CNM5380
64	Connector	CNV4875	CNV4875
65	Grille Unit	CXB1191	CXB1199
66	Cover Unit	CXB1201	CXB1203
67	Panel Assy	CXB1453	CXB1455
68	Screw	BPZ20P060FMC	BPZ20P060FMC
69	Screw	CBA1082	CBA1082
70	Screw	CBA1176	CBA1176
71	Washer	CBF1001	CBF1001
72	Spring	CBH2063	CBH2063
73	Spring	CBH1660	CBH1660
74	Spring	CBH1696	CBH1696
75	Connector	CKS2780	CKS2780

Mark No.	Description	Part No. KEH-P6600R/EW	Part No. KEX-P66R/EW
76	Roller	CLA3247	CLA3247
77	Arm	CNC7130	CNC7130
78	Sheet	CNM5142	CNM5142
79	Panel	CNS4432	CNS4435
80	Holder	CNV2141	CNV2141
81	Cover	CNV3965	CNV3965
82	Holder	CNV4979	CNV4979
83	Damper Unit	CXA7159	CXA7159
84	Holder Unit	CXA7794	CXA7794
85	Holder Unit	CXA9806	CXA9806
86	Holder Unit	CXA9807	CXA9807
87	Screw	IMS20P040FZK	IMS20P040FZK
88	P.C.Board	CNP4720	CNP4720
89	Cassette Mechanism Module	EXK3610	EXK3610
90	Screw	BSZ26P050FMC	BSZ26P050FMC
91	Cord	MDE9001	MDE9001
92	Holder	MNC9001	MNC9001
93	Holder	MNC9002	MNC9002
94	Insulator	MNM9001	MNM9001
95	Inverter Unit	MWM9011	MWM9011
96	Plug(CN101)	CKS1224	CKS1224
97	Connector(CN352)	•••••	CKS3598
98	Screw	CBA1284	CBA1284
99	Handle	CNC5395	CNC5395
100	Spring	CBH-865	CBH-865
101	IC(IC551)	TDA7384A	•••••
102	Transistor(Q641)	2SD1189	2SD1189
103	Transistor(Q624)	2SD2395	2SD2395
* 104	Spacer	CNM5532	CNM5532
105	Connector	•••••	CDE5344
106	Screw	BSZ30P050FMC	•••••
107	Cord Assy	•••••	CDE5321
108	Fuse(4A)	•••••	CEK1001
* 109	Cushion	CNM5486	CNM5486
110	Spacer	CNM5488	CNM5488

2.3 CASSETTE MECHANISM MODULE

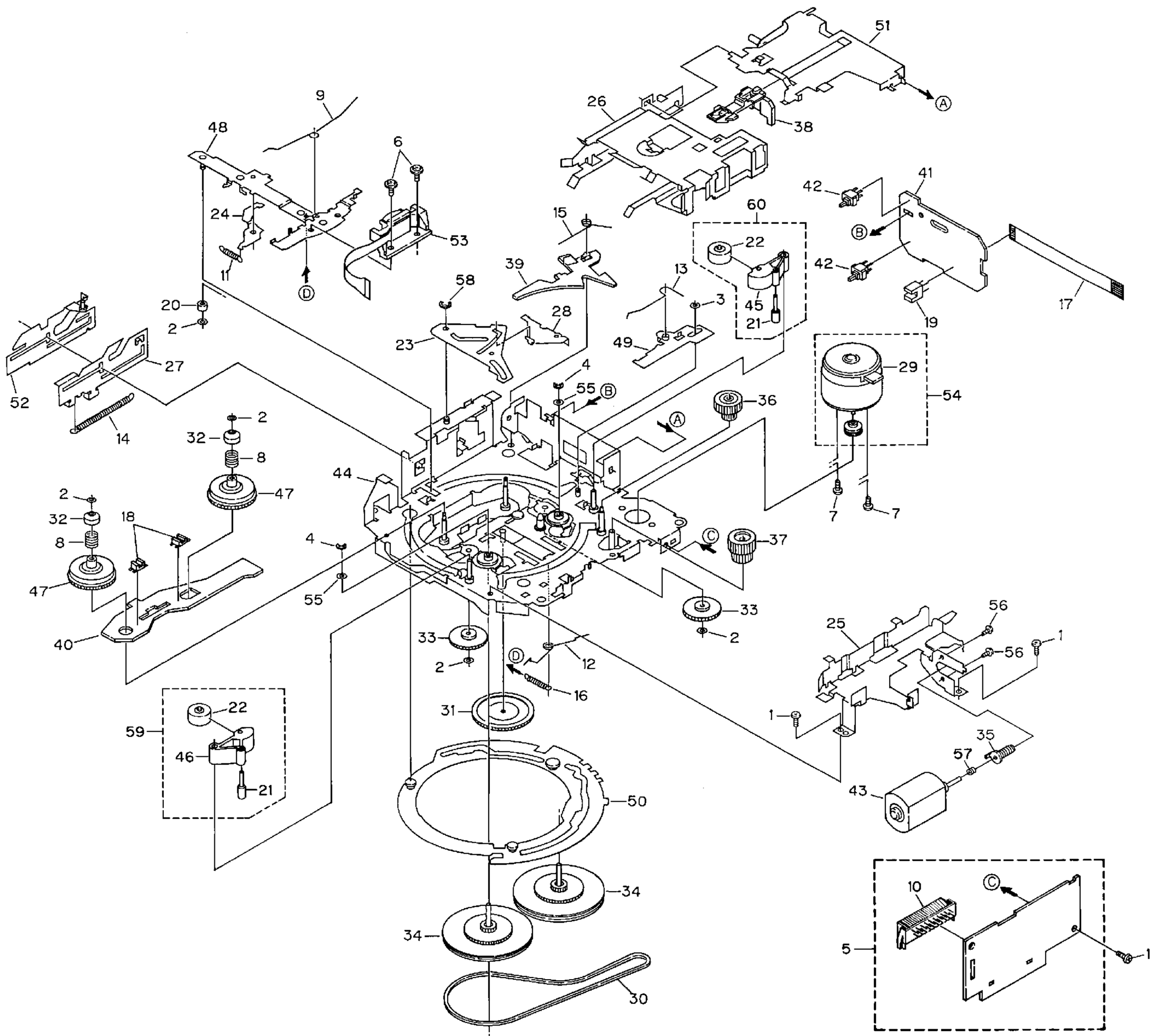

Fig. 5

● Parts List

Mark No.	Description	Part No.
1	Screw	BSZ20P040FMC
2	Washer	CBF1037
3	Washer	CBF1038
4	Washer	CBG1003
5	Deck Unit	EWM1010
6	Screw	EBA1028
7	Screw	EBA1037
8	Spring	EBH1531
9	Spring	EBH1575
10	Plug(CN251)	CKS3540
11	Spring	EBH1515
12	Spring	EBH1587
13	Spring	EBH1517
14	Spring	EBH1518
15	Spring	EBH1519
16	Spring	EBH1537
17	Cord	EDD1020
18	Photo-interrupter(EGN2,3)	EGN1006
19	Photo-interrupter(EGN1)	EGN1005
20	Roller	ENR1031
21	Shaft	ELA1373
22	Pinch Roller	ENV1501
23	Arm	ENC1396
24	Arm	ENC1397
25	Guide	ENC1481
26	Holder	ENC1417
27	Lever	ENC1448
28	Arm	ENC1401
29	Motor	EXM1028
30	Belt	ENT1027

Mark No.	Description	Part No.
31	Gear	ENV1347
32	Collar	ENV1508
33	Gear	ENV1350
34	Flywheel	ENV1516
35	Worm Gear	ENV1439
36	Worm Wheel	ENV1440
37	Gear	ENR1028
38	Lever	ENV1442
39	Arm	ENV1445
40	Gathering P.C.Board	ENX1037
41	Gathering P.C.Board	ENX1042
42	Switch(S1,S2)	ESG1004
43	Motor Unit(M2)	EXA1485
44	Chassis Unit	EXA1455
45	Pinch Holder	ENV1485
46	Pinch Holder	ENV1486
47	Reel Unit	EXA1456
48	Head Base Unit	EXA1457
49	Lever Unit	EXA1438
50	Gear Unit	EXA1436
51	Frame Unit	EXA1458
52	Lever Unit	EXA1439
53	Head Assy(HD1)	EXA1506
54	Motor Unit(M1)	EXA1491
55	Washer	HBF-179
56	Screw	BMZ20P022FMC
57	Spring	EBH1545
58	Washer	YE20FUC
59	Pinch Holder Unit	EXA1501
60	Pinch Holder Unit	EXA1500

3. SCHEMATIC DIAGRAM

3.1 OVERALL CONNECTION DIAGRAM(GUIDE PAGE)

Note: When ordering service parts, be sure to refer to "EXPLODED VIEWS AND PARTS LIST" or "ELECTRICAL PARTS LIST".

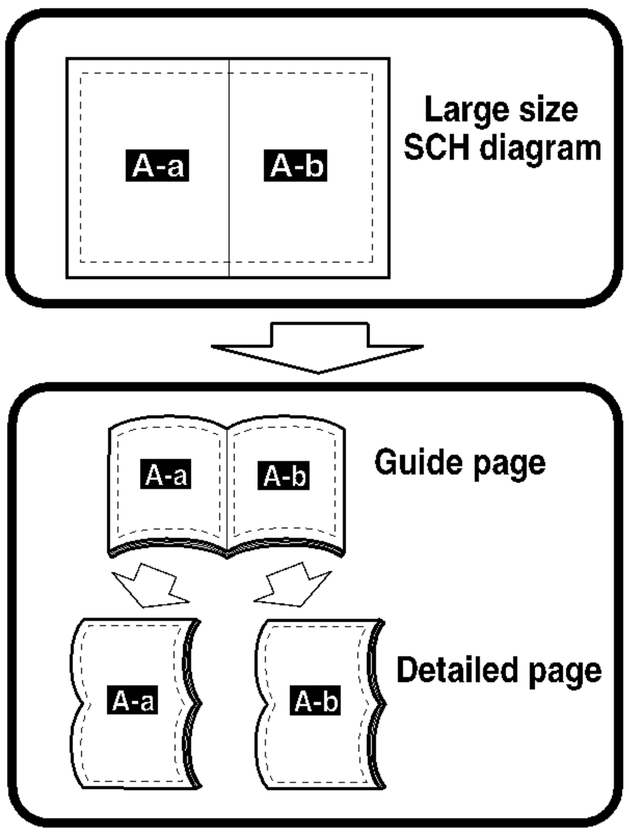

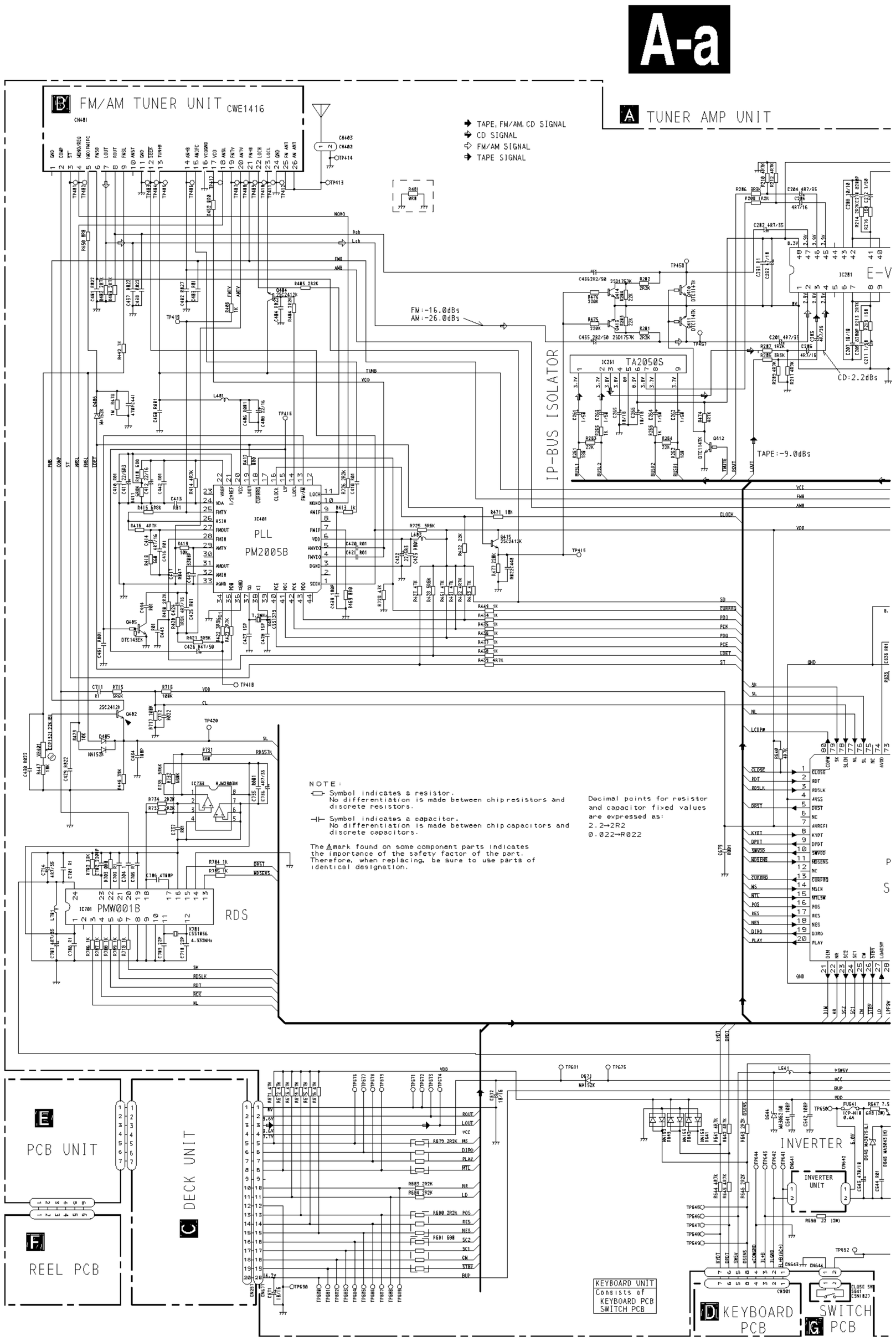

A-b

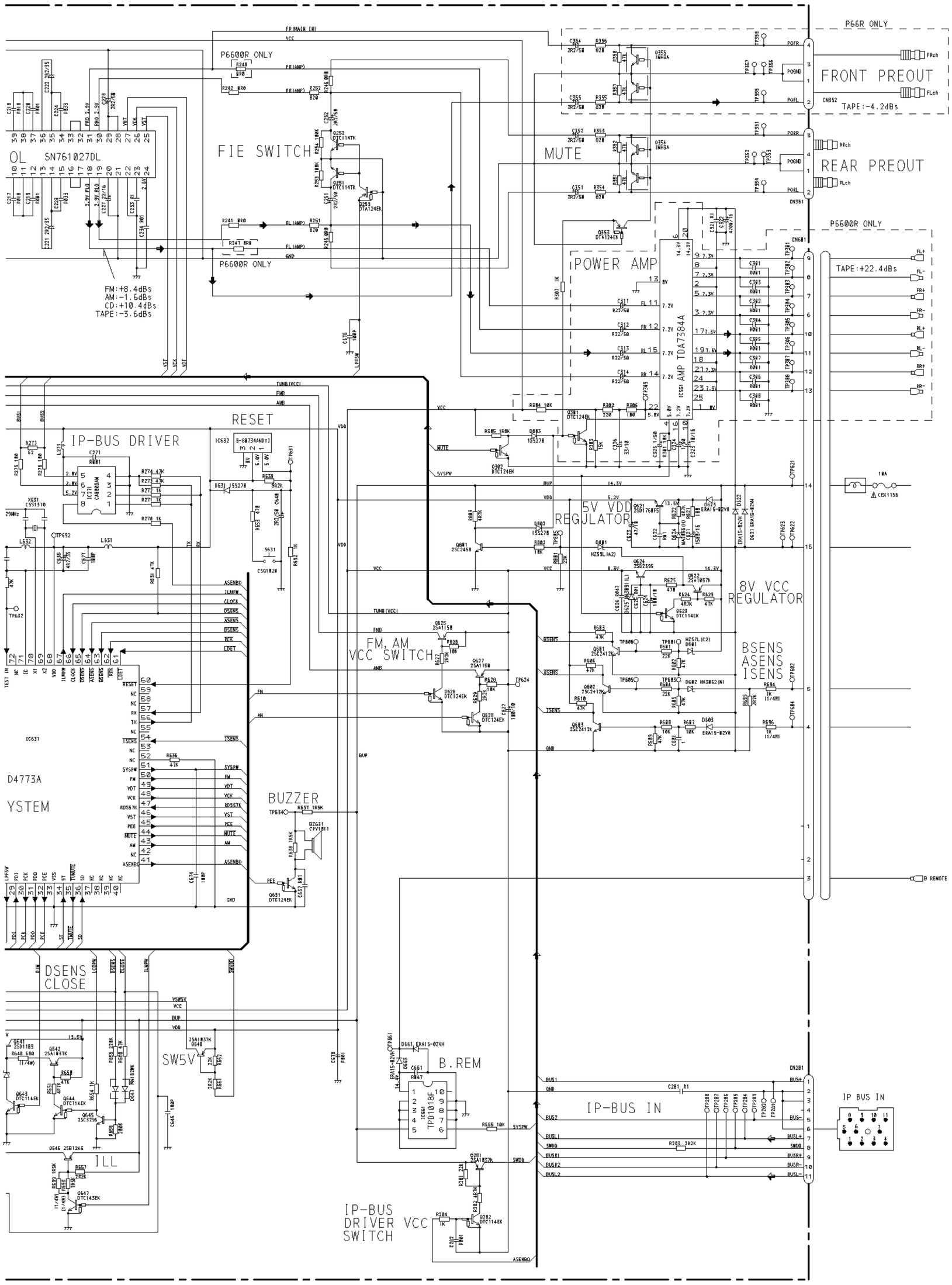
P66R ONLY
FRONT PREOUT
TAPE:-4.2dBs
P6600R ONLY
FIE SWITCH
MUTE
REAR PREOUT
OL SN761027DL
FM:+8.4dBs
AM:-1.6dBs
CD:+10.4dBs
TAPE:-3.6dBs
POWER AMP
AMP TDA7384A
TAPE:+22.4dBs
RESET
IP-BUS DRIVER
5V VDD REGULATOR
8V VCC REGULATOR
FM, AM VCC SWITCH
BSENS ASENS ISENS
D4773A
YSTEM
BUZZER
DSENS CLOSE
SW5V
B.REM
ILL
IP-BUS IN
IP BUS IN
IP-BUS DRIVER SWITCH VCC

Fig. 6

A

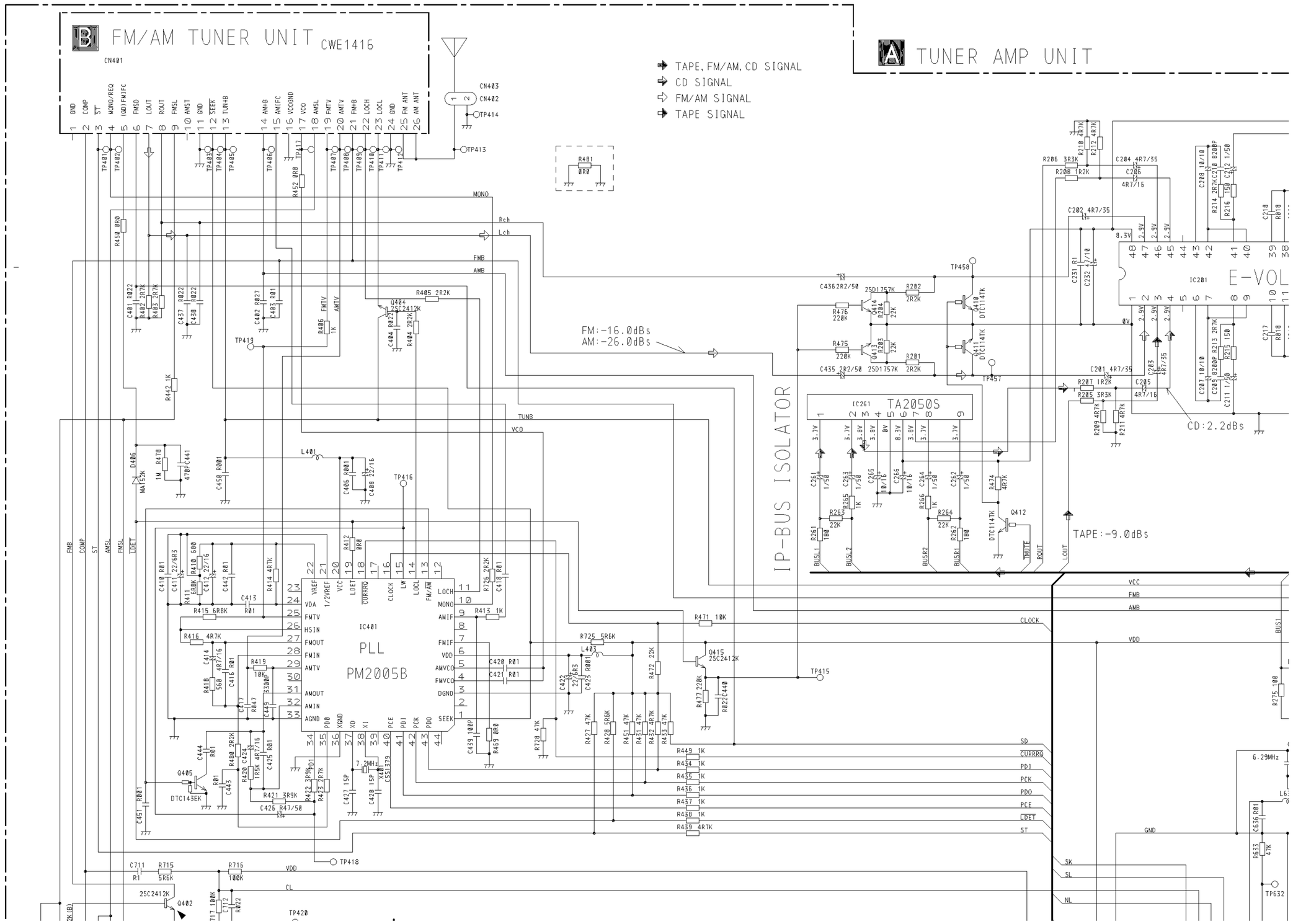
A-a A-b
FM/AM TUNER UNIT CWE1416
TUNER AMP UNIT
TAPE, FM/AM, CD SIGNAL
CD SIGNAL
FM/AM SIGNAL
TAPE SIGNAL
IP-BUS ISOLATOR
IC261 TA2050S
IC401 PLL PM2005B
IC201 E-VOL
FM:-16.0dBs
AM:-26.0dBs
CD:2.2dBs
TAPE:-9.0dBs
6.29MHz
7.2MHz

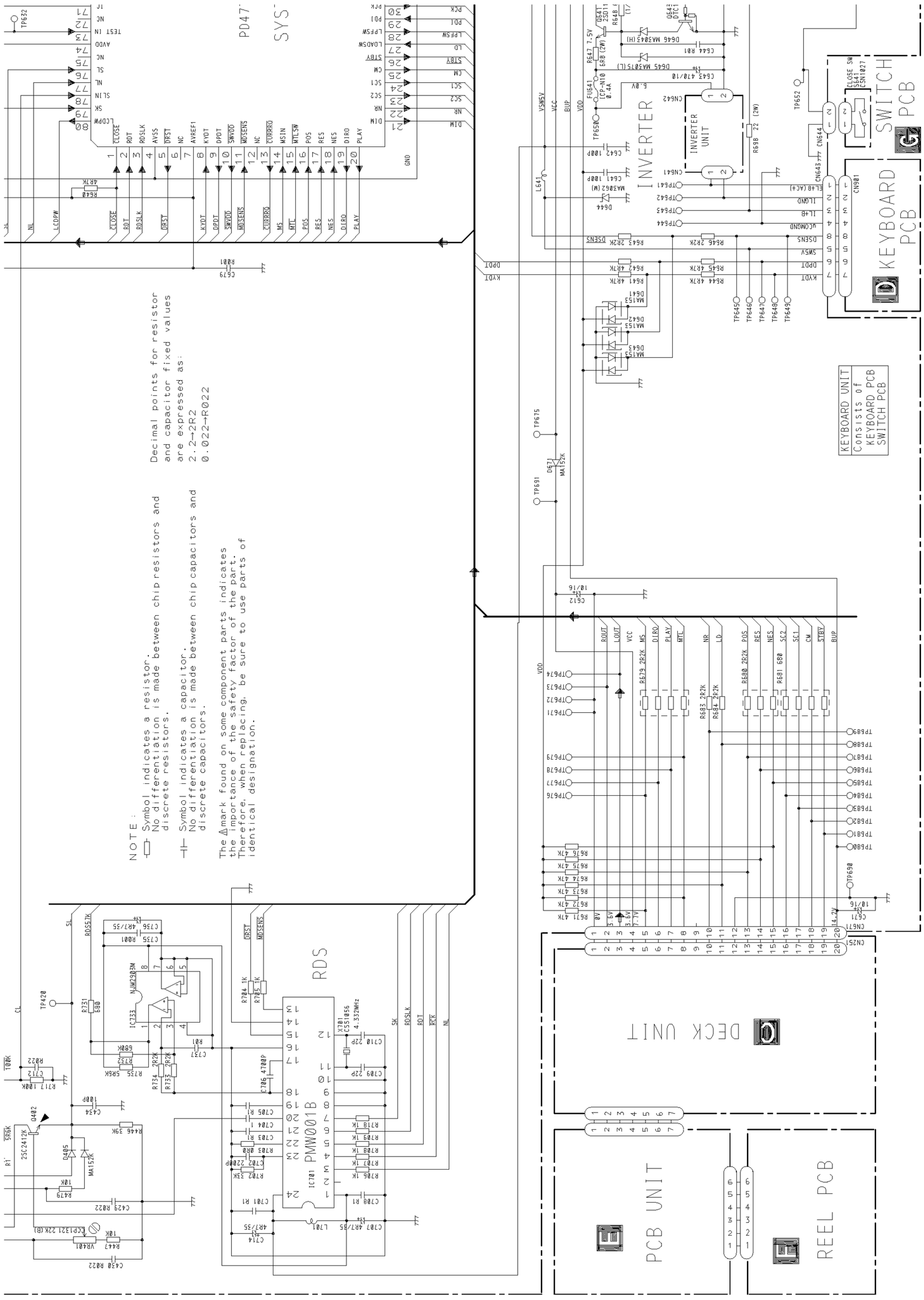
NOTE :
Symbol indicates a resistor. No differentiation is made between chip resistors and discrete resistors.
Symbol indicates a capacitor. No differentiation is made between chip capacitors and discrete capacitors.
The ⚠mark found on some component parts indicates the importance of the safety factor of the parts. Therefore, when replacing, be sure to use parts of identical designation.
Decimal points for resistor and capacitor fixed values are expressed as:
2.2→2R2
0.022→R022
INVERTER
INVERTER UNIT
KEYBOARD PCB
SWITCH PCB
KEYBOARD UNIT
Consists of KEYBOARD PCB SWITCH PCB
DECK UNIT
PCB UNIT
REEL PCB
RDS
PMW001B
SYS
A-a
A-b

Fig. 7

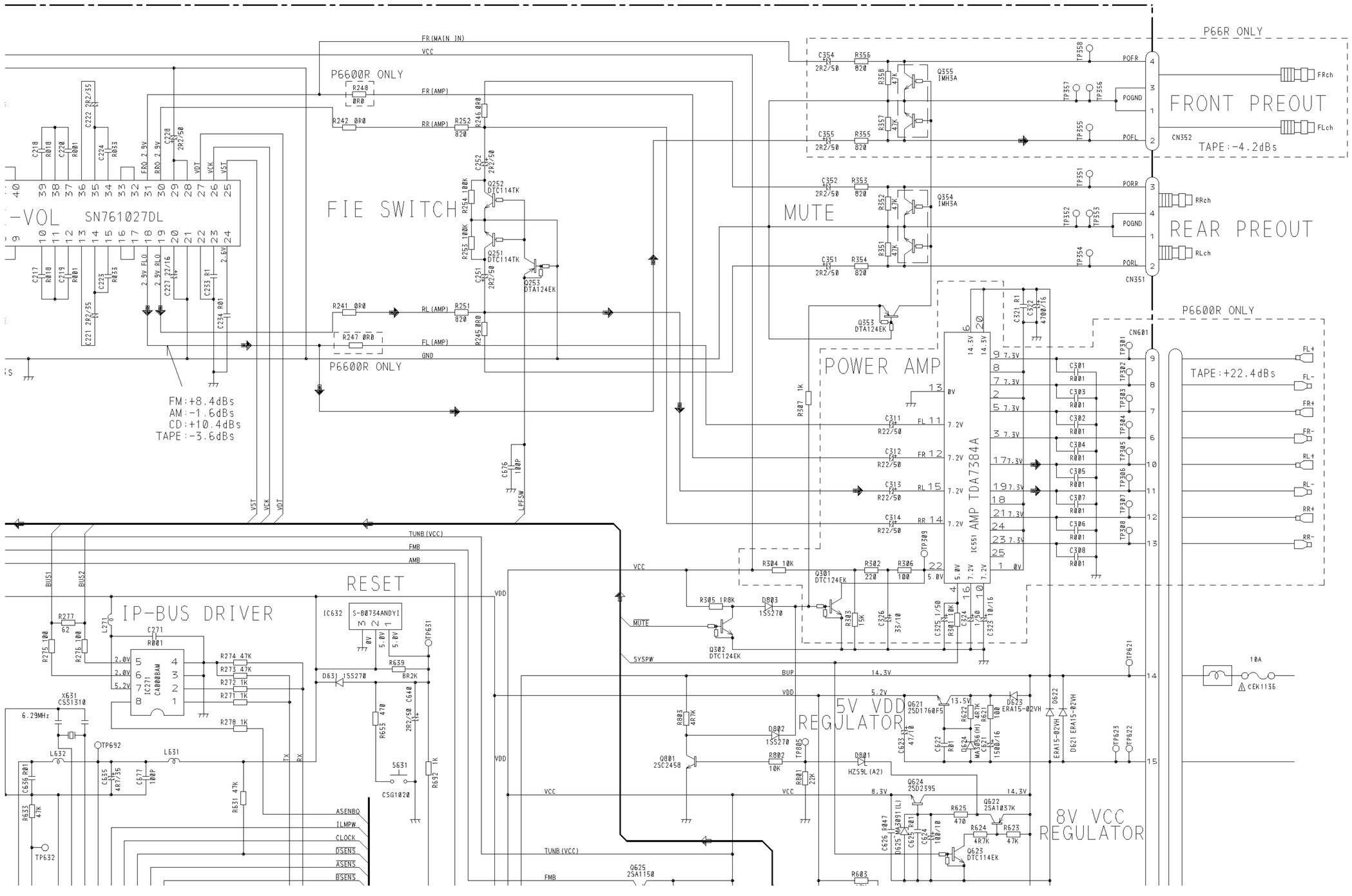
P66R ONLY
FRONT PREOUT
TAPE:-4.2dBs
REAR PREOUT
P6600R ONLY
TAPE:+22.4dBs
FIE SWITCH
MUTE
POWER AMP
AMP TDA7384A
-VOL
SN761027DL
FM:+8.4dBs
AM:-1.6dBs
CD:+10.4dBs
TAPE:-3.6dBs
RESET
IP-BUS DRIVER
5V VDD REGULATOR
8V VCC REGULATOR

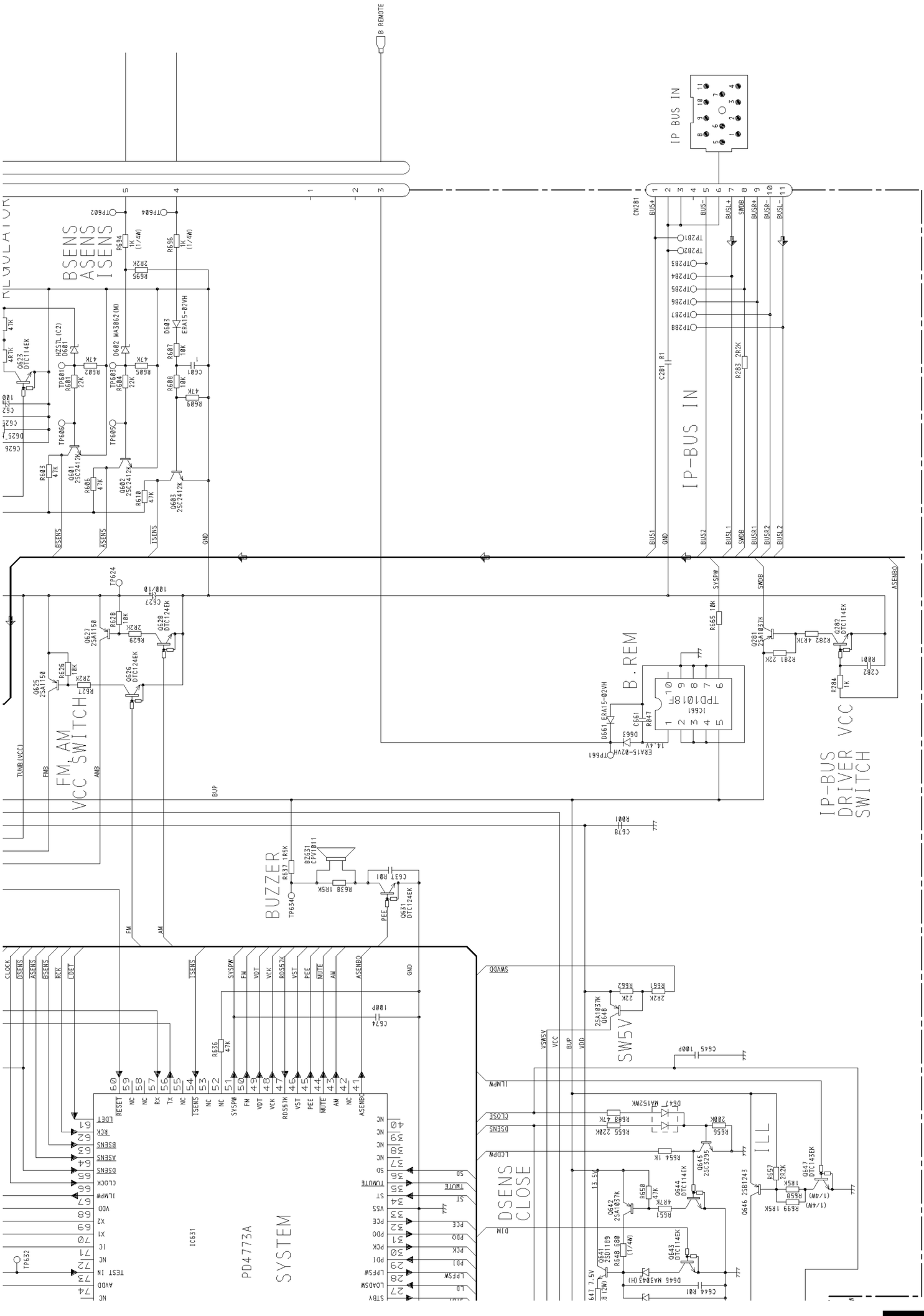
A-a
A-b
B REMOTE
IP BUS IN
IP-BUS IN
B. REM
TPD1018F
IC661
FM, AM VCC SWITCH
IP-BUS DRIVER VCC SWITCH
BUZZER
SW5V
DSENS CLOSE
ILL
PD4773A SYSTEM
IC631
BSENS
ASENS
ISENS
GND
BUS1
BUS2
BUS+
BUS-
BUSL+
BUSL-
BUSR+
BUSR-
BUSL1
BUSL2
BUSR1
BUSR2
SWDB
SYSPW
ASENBQ
TUNB(VCC)
FMB
AMB
BUP
FM
AM
CLOCK
DSENS
RCK
LDET
TSENS
VDT
VCK
ROSCTK
VST
PEE
MUTE
VSWSV
VCC
VDD
ILLMW
CLOSE
LCDPW
DIM
TMUTE
SD
ST
PCE
PDO
PCK
PDI
LPFSW
LOADSW
STBY
TEST IN
AVDD
RESET
RX
TX
X1
X2
IC
TP632

Fig. 8

3.2 KEYBOARD PCB

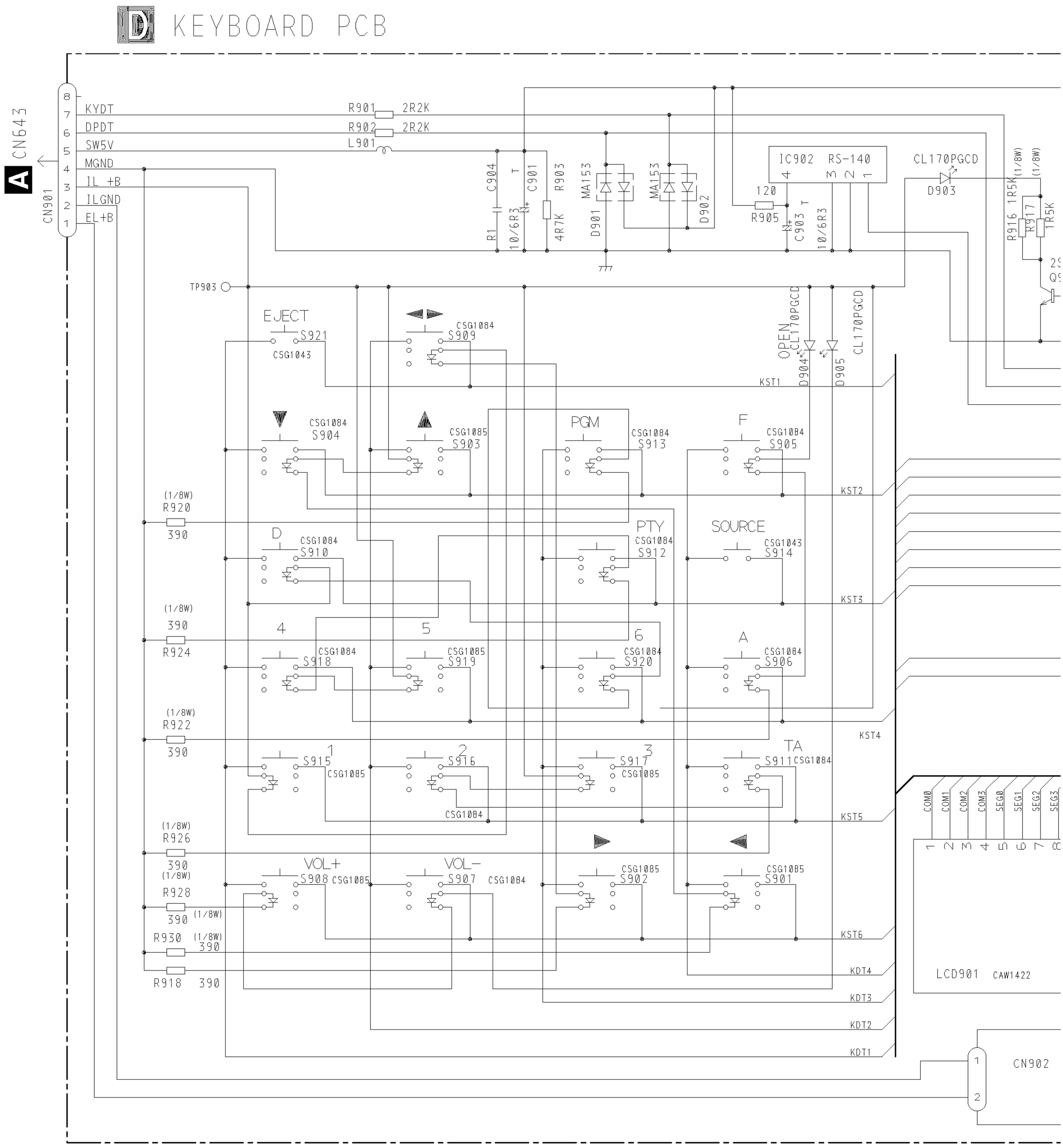

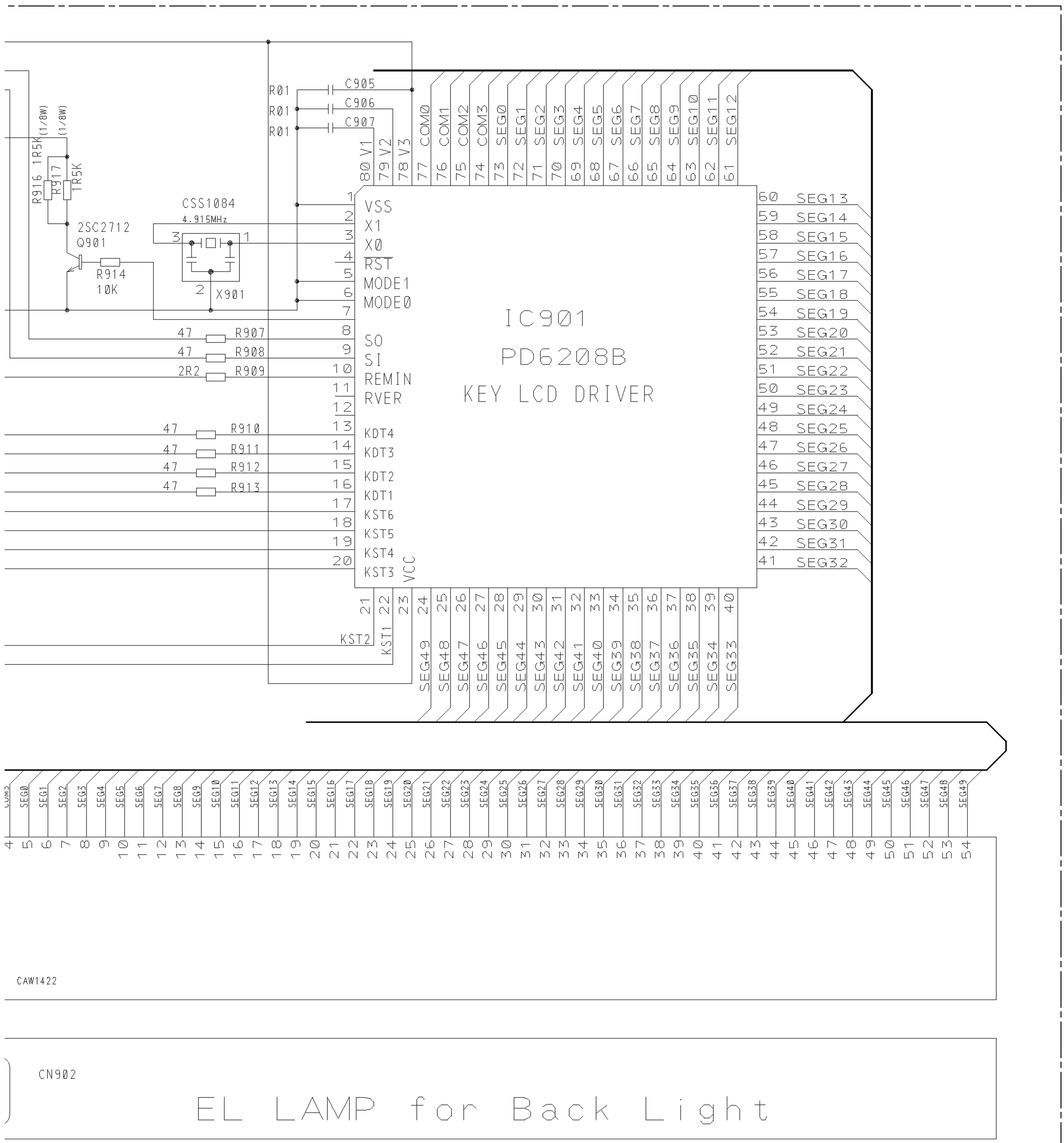

KEYBOARD UNIT
Consists of KEYBOARD PCB SWITCH PCB

Fig. 9

3.3 FM/AM TUNER UNIT

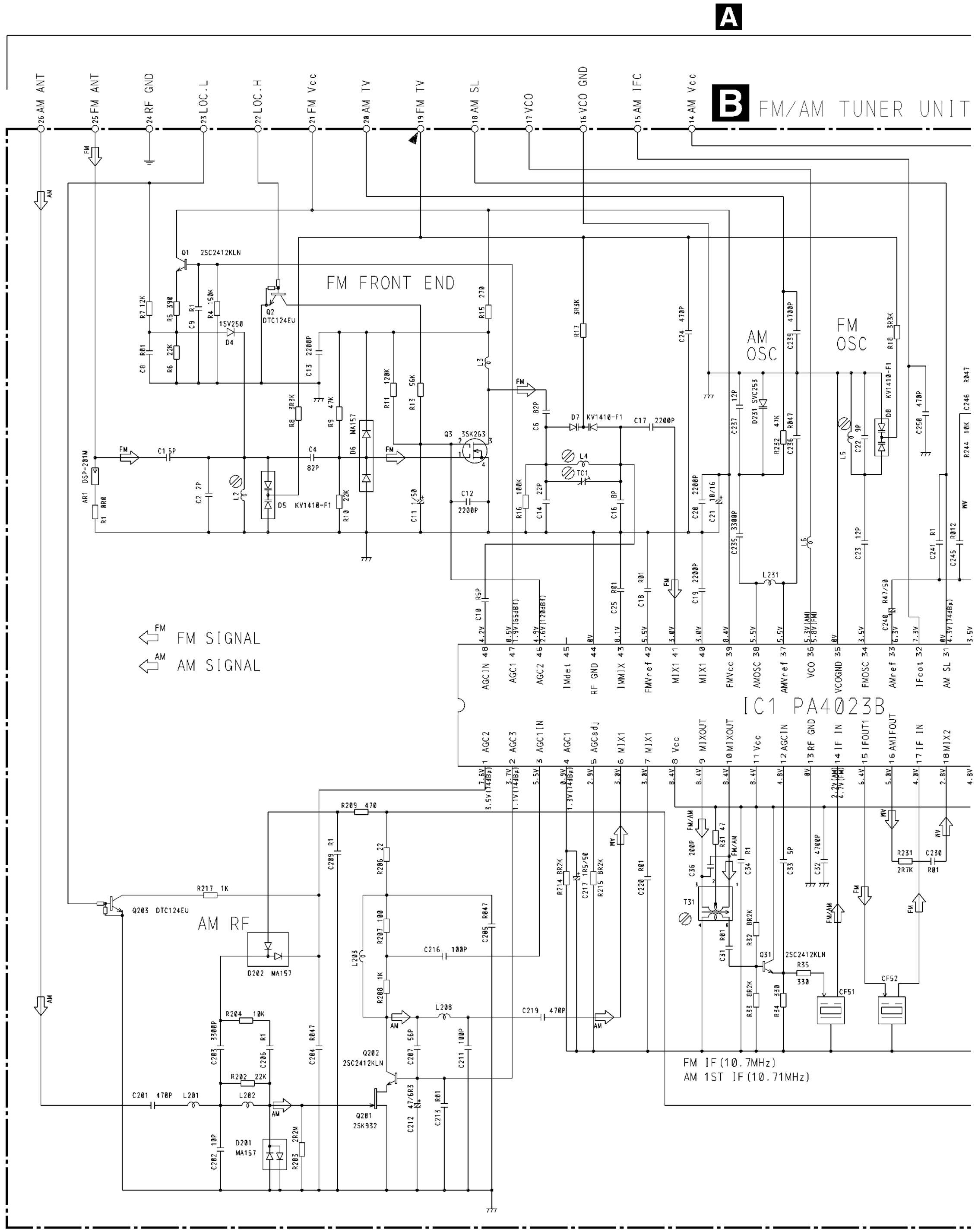

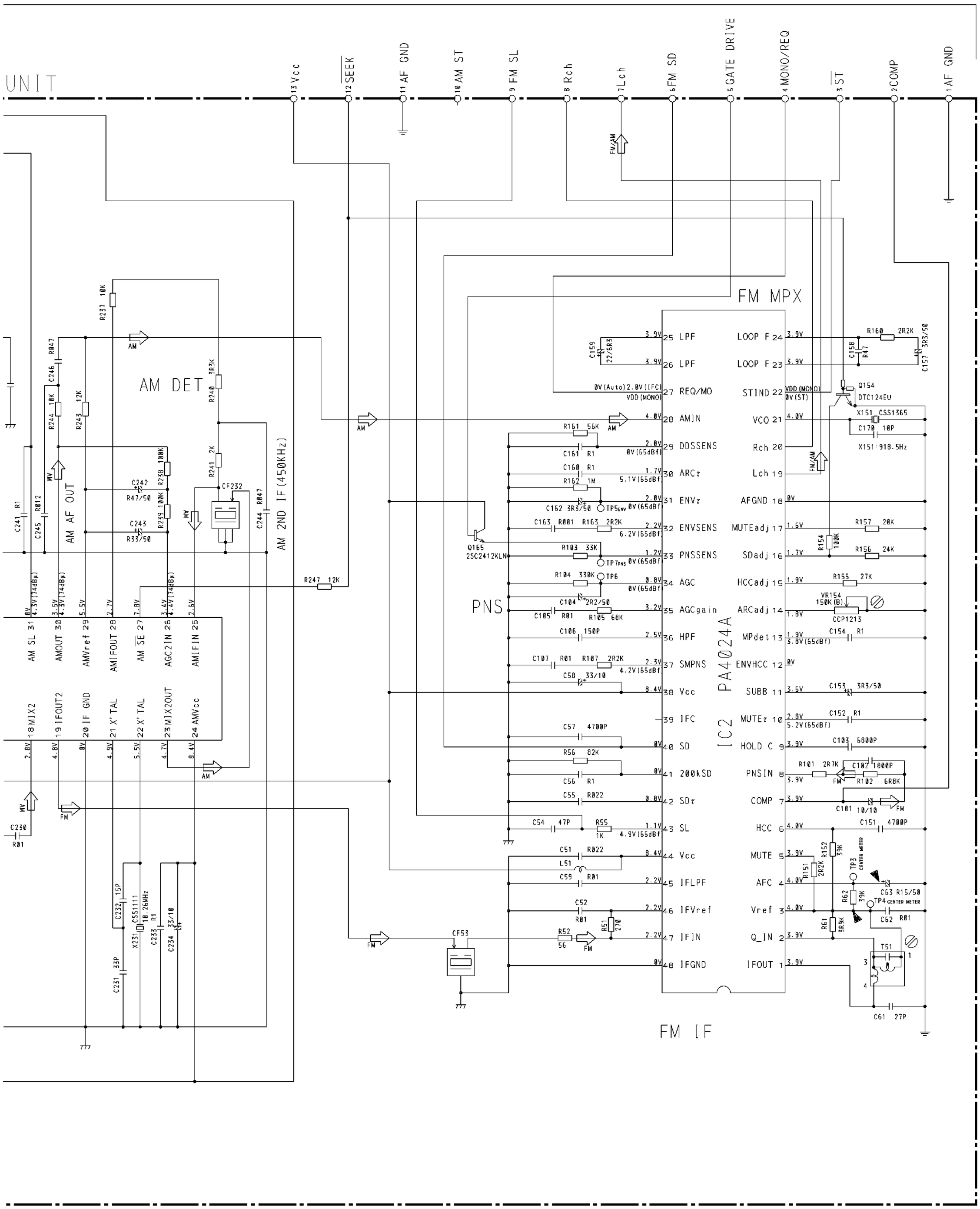
UNIT
AM DET
AM AF OUT
AM 2ND IF (450KHz)
FM MPX
PNS
IC2 PA4024A
FM IF
13 Vcc
12 SEEK
11 AF GND
10 AM ST
9 FM SL
8 Rch
7 Lch
6 FM SD
5 GATE DRIVE
4 MONO/REQ
3 ST
2 COMP
1 AF GND
AM SL 31
AMOUT 30
AMVref 29
AMIFOUT 28
AM SE 27
AGC2IN 26
AMIFIN 25
18 MIX2
19 IFOUT2
20 IF GND
21 X'TAL
22 X'TAL
23 MIX2OUT
24 AMVcc
25 LPF
26 LPF
27 REQ/MO
28 AMIN
29 DDSSENS
30 ARCτ
31 ENVτ
32 ENVSENS
33 PNSSENS
34 AGC
35 AGCgain
36 HPF
37 SMPNS
38 Vcc
39 IFC
40 SD
41 200kSD
42 SDτ
43 SL
44 Vcc
45 IFLPF
46 IFVref
47 IFIN
48 IFGND
LOOP F 24
LOOP F 23
STIND 22
VCO 21
Rch 20
Lch 19
AFGND 18
MUTEadj 17
SDadj 16
HCCadj 15
ARCadj 14
MPdet 13
ENVHCC 12
SUBB 11
MUTEτ 10
HOLD C 9
PNSIN 8
COMP 7
HCC 6
MUTE 5
AFC 4
Vref 3
Q_IN 2
IFOUT 1
X151 CSS1365
X151:918.5Hz
X231 CSS1111 10.26MHz
CF232
CF53
Q165 2SC2412KLN
Q154 DTC124EU
VR154 150K(B)
CCP1213
TP3 CENTER METER
TP4 CENTER METER
T51

Fig.10

3.4 CASSETTE MECHANISM MODULE

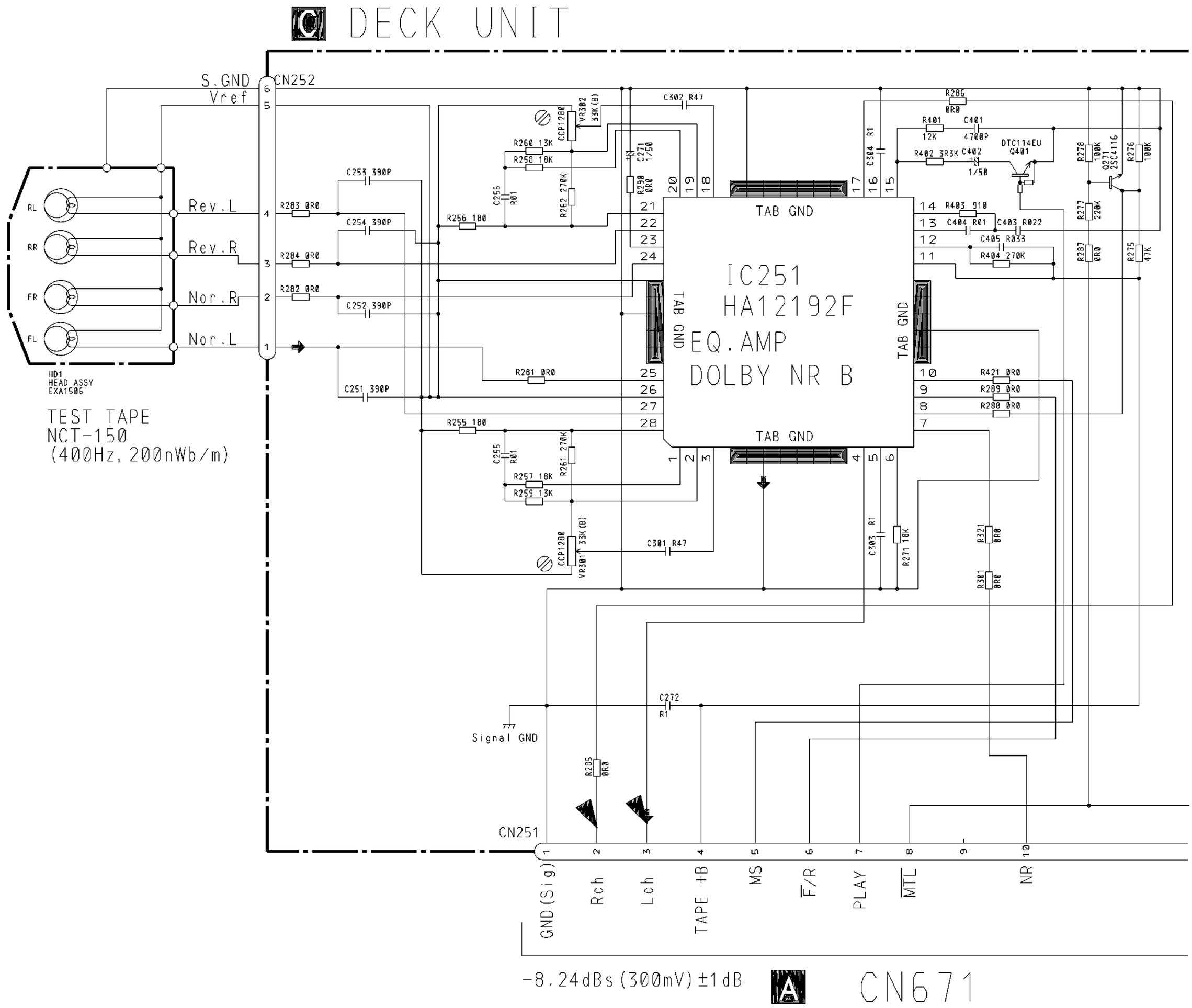

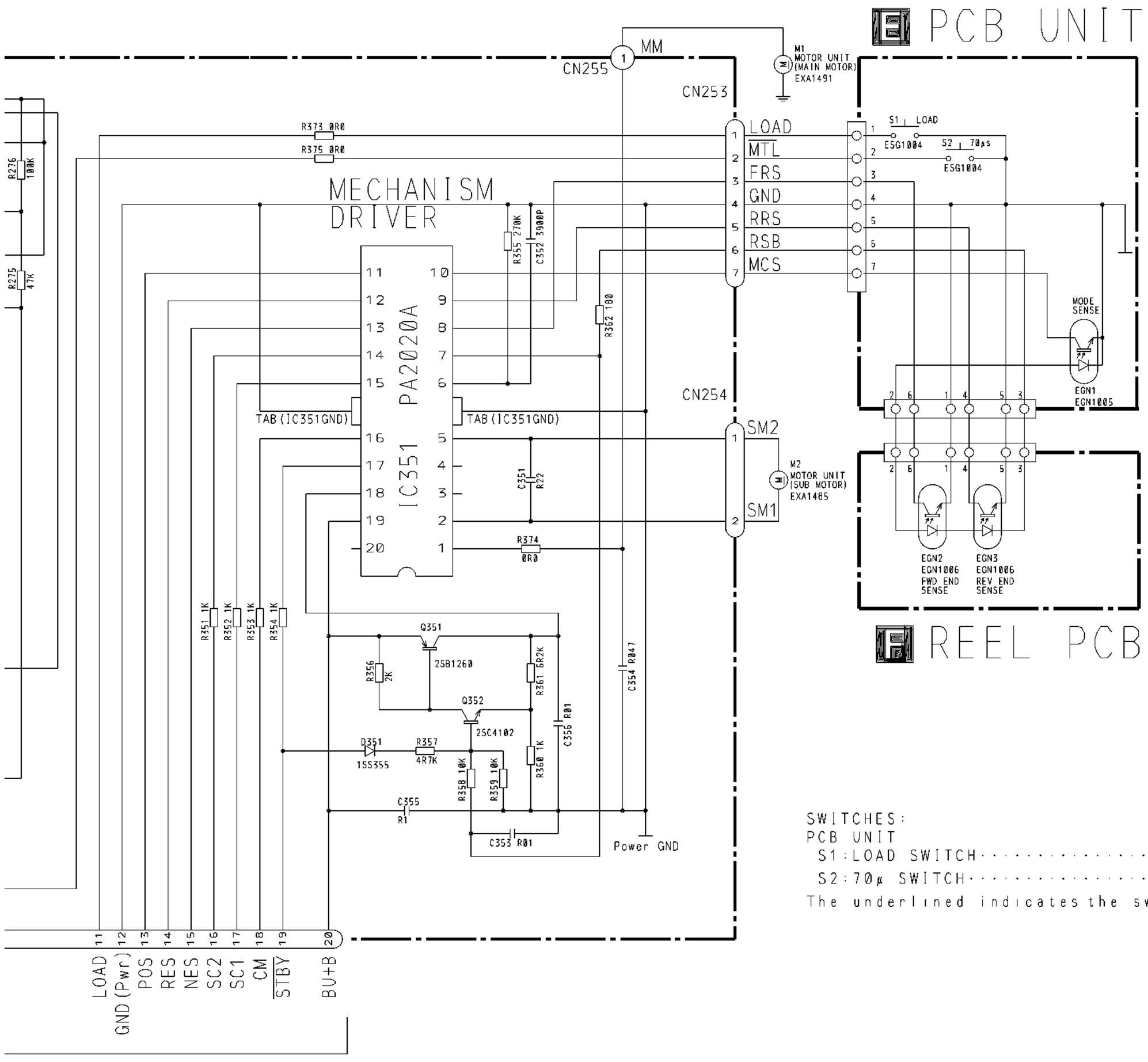

SWITCHES:
PCB UNIT
S1:LOAD SWITCH·····EJECT-PLAY
S2:70μ SWITCH·····ON-OFF
The underlined indicates the switch position.

Fig. 11

5. ELECTRICAL PARTS LIST

NOTE:

- Parts whose parts numbers are omitted are subject to being not supplied.
- The part numbers shown below indicate chip components.

  Chip Resistor

  RS1/○S○○○J,RS1/○○S○○○J

  Chip Capacitor (except for CQS.....)

  CKS....., CCS....., CSZS.....

B Unit Number :CWE1416
Unit Name :FM/AM Tuner Unit

MISCELLANEOUS

=====Circuit Symbol & No.===Part Name			Part No.
IC	1	IC	PA4023B
IC	2	IC	PA4024A
Q	1	Transistor	2SC2412KLN
Q	2	Transistor	DTC124EU
Q	3	FET	3SK263
Q	31	Transistor	2SC2412KLN
Q	154	Transistor	DTC124EU
Q	165	Transistor	2SC2412KLN
Q	201	FET	2SK932
Q	202	Transistor	2SC2412KLN
Q	203	Transistor	DTC124EU
D	4	Diode	1SV250
D	5	Diode	KV1410-F1
D	6	Diode	MA157
D	7	Diode	KV1410-F1
D	8	Diode	KV1410-F1
D	201	Diode	MA157
D	202	Diode	MA157
D	231	Diode	SVC253
L	2	Coil	CTC1108
L	3	Inductor	LCTB2R2K2125
L	4	Coil	CTC1108
L	5	Coil	CTC1107
L	6	Inductor	LCTBR15K1608
L	51	Ferri-Inductor	LAU150K
L	201	Ferri-Inductor	LAU4R7K
L	202	Ferri-Inductor	LAU330K
L	203	Inductor	CTF1287
L	208	Inductor	LAU121K
L	231	Inductor	LCTA3R3J3225
T	31	Coil	CTE1116
T	51	Coil	CTC1136
TC	1	Capacitor	CCL1038
CF	51	Ceramic Filter	CTF1292
CF	52	Ceramic Filter	CTF1292
CF	53	Ceramic Filter	CTF1292
CF	232	Ceramic Filter	CTF1348
X	151	Resonator 920.5kHz	CSS1365
X	231	Crystal Resonator 10.26MHz	CSS1111
VR	154	Semi-fixed 150kΩ(B)M	CCP1213
AR	1	Capacitor with Discharge Gap	DSP-201M

RESISTORS

=====Circuit Symbol & No.===Part Name		Part No.
R	1	RS1/16S0R0J
R	4	RS1/16S154J
R	5	RS1/16S391J
R	6	RS1/16S223J
R	7	RS1/16S123J
R	8	RS1/16S332J
R	9	RS1/16S473J
R	10	RS1/16S223J
R	11	RS1/16S124J
R	13	RS1/16S563J
R	15	RS1/16S271J
R	16	RS1/16S104J
R	17	RS1/16S332J
R	18	RS1/16S332J
R	31	RS1/16S470J
R	32	RS1/16S822J
R	33	RS1/16S822J
R	34	RS1/16S331J
R	35	RS1/16S331J
R	51	RS1/16S271J
R	52	RS1/16S560J
R	55	RS1/16S102J
R	56	RS1/16S823J
R	61	RS1/16S392J
R	62	RS1/16S393J
R	101	RS1/16S272J
R	102	RS1/16S682J
R	103	RS1/16S333J
R	104	RS1/16S334J
R	105	RS1/16S683J
R	107	RS1/16S222J
R	151	RS1/16S222J
R	152	RS1/16S393J
R	154	RS1/16S104J
R	155	RS1/16S273J
R	156	RS1/16S243J
R	157	RS1/16S203J
R	160	RS1/16S222J
R	161	RS1/16S563J
R	162	RS1/16S105J
R	163	RS1/16S222J
R	202	RS1/16S223J
R	203	RS1/16S225J
R	204	RS1/16S103J
R	206	RS1/16S220J
R	207	RS1/16S101J
R	208	RS1/16S102J
R	209	RS1/16S471J
R	214	RS1/16S822J
R	215	RS1/16S822J
R	217	RS1/16S102J
R	231	RS1/16S272J
R	232	RS1/16S473J
R	237	RS1/16S103J
R	238	RS1/16S104J
R	239	RS1/16S104J
R	240	RS1/16S332J
R	241	RS1/16S202J
R	243	RS1/16S123J
R	244	RS1/16S103J

=====Circuit Symbol & No.===Part Name		Part No.
R	247	RS1/16S123J
CAPACITORS		
C	1	CCSQCH6R0D50
C	2	CCSRCK2R0C50
C	4	CCSRCH820J50
C	6	CCSRCH820J50
C	8	CKSRYB103K25
C	9	CKSQYB104K16
C	10	CCSRCKR50C50
C	11	CEJA1R0M50
C	12	CKSRYB222K50
C	13	CKSRYB222K50
C	14	CCSRCH220J50
C	16	CCSRCH8R0D50
C	17	CKSRYB222K50
C	18	CKSRYB103K25
C	19	CKSRYB222K50
C	20	CKSRYB222K50
C	21	CEJA100M16
C	22	CCSRTH9R0D50
C	23	CCSRTH120J50
C	24	CCSRCH471J50
C	25	CKSRYB103K25
C	31	CKSRYB103K25
C	32	CKSQYB472K50
C	33	CCSRCH5R0C50
C	34	CKSQYB104K16
C	36	CCSRRH201J50
C	51	CKSRYB223K25
C	52	CKSRYB103K25
C	54	CCSRCH470J50
C	55	CKSQYB223K25
C	56	CKSQYB104K16
C	57	CKSRYB472K50
C	58	CEJA330M10
C	59	CKSRYB103K25
C	61	CCSRCH270J50
C	62	CKSRYB103K25
C	63	CEJAR15M50
C	101	CEJANP100M10
C	102	CKSRYB182K50
C	103	CKSRYB682K25
C	104	CEJA2R2M50
C	105	CKSRYB103K25
C	106	CCSRCH151J50
C	107	CKSRYB103K25
C	151	CKSRYB472K50
C	152	CKSQYB104K16
C	153	CEJA3R3M50
C	154	CKSQYB104K16
C	157	CEJA3R3M50
C	158	CKSYB474K16
C	159	CEJA220M6R3
C	160	CKSQYB104K16
C	161	CKSQYB104K16
C	162	CEJA3R3M50
C	163	CKSRYB102K50
C	170	CCSRCH100D50
C	201	CCSRCH471J50
C	202	CCSRCH100D50
C	203	CKSRYB332K50
C	204	CKSQYB473K16
C	205	CKSQYB473K16
C	206	CKSQYB104K16
C	207	CCSRCH560J50
C	209	CKSQYB104K16
C	211	CCSRCH101J50

=====Circuit Symbol & No.===Part Name		Part No.
C	212	CEJA470M6R3
C	213	CKSRYB103K25
C	216	CCSRCH101J50
C	217	CEJA1R5M50
C	219	CCSRCH471J50
C	220	CKSRYB103K25
C	230	CKSRYB103K25
C	231	CCSRCH330J50
C	232	CCSRCH150J50
C	233	CKSQYB104K16
C	234	CEJA330M10
C	235	CKSRYB332K50
C	236	CKSQYB473K16
C	237	CCSRCH120J50
C	239	CKSRYB472K50
C	240	CEJAR47M50
C	241	CKSQYB104K16
C	242	CEJAR47M50
C	243	CEJAR33M50
C	244	CKSQYB473K16
C	245	CKSRYB123K25
C	246	CKSQYB473K16
C	250	CCSRCH471J50

A Unit Number :CWM5318(KEH-P6600R/EW)
Unit Name :Tuner Amp Unit

MISCELLANEOUS

IC	201	IC	SN761027DL
IC	261	IC	TA2050S
IC	271	IC	CA0008AM
IC	401	IC	PM2005B
IC	551	IC	See Contrast Table
IC	631	IC	PD4773A
IC	632	IC	S-80734ANDYI
IC	661	IC	TPD1018F
IC	701	IC	PMW001B
IC	733	IC	NJM2903M
Q	251	Transistor	DTC114TK
Q	252	Transistor	DTC114TK
Q	253	Transistor	DTA124EK
Q	281	Transistor	2SA1037K
Q	282	Transistor	DTC114EK
Q	301	Transistor	See Contrast Table
Q	302	Transistor	DTC124EK
Q	353	Transistor	DTA124EK
Q	354	Transistor	IMH3A
Q	402	Transistor	2SC2412K
Q	404	Transistor	2SC2412K
Q	405	Transistor	DTC143EK
Q	410	Transistor	DTC114TK
Q	411	Transistor	DTC114TK
Q	412	Transistor	DTC114TK
Q	413	Transistor	2SD1757K
Q	414	Transistor	2SD1757K
Q	415	Transistor	2SC2412K
Q	601	Transistor	2SC2412K
Q	602	Transistor	2SC2412K
Q	603	Transistor	2SC2412K
Q	621	Transistor	2SD1760F5
Q	622	Transistor	2SA1037K
Q	623	Transistor	DTC114EK
Q	624	Transistor	2SD2395
Q	625	Transistor	2SA1150
Q	626	Transistor	DTC124EK
Q	627	Transistor	2SA1150
Q	628	Transistor	DTC124EK
Q	631	Transistor	DTC124EK

Circuit Symbol & No.		Part Name	Part No.
Q	641	Transistor	2SD1189
Q	642	Transistor	2SA1037K
Q	643	Transistor	DTC114EK
Q	644	Transistor	DTC114EK
Q	645	Transistor	2SC3295
Q	646	Transistor	2SB1243
Q	647	Transistor	DTC143EK
Q	648	Transistor	2SA1037K
Q	801	Transistor	2SC2458
D	405	Diode	MA152K
D	406	Diode	MA152K
D	601	Diode	HZS7L(C2)
D	602	Diode	MA3062(M)
D	603	Diode	ERA15-02VH
D	621	Diode	ERA15-02VH
D	622	Diode	ERA15-02VH
D	623	Diode	ERA15-02VH
D	624	Diode	MA3056(H)
D	625	Diode	MA3091(L)
D	631	Diode	1SS270
D	641	Diode	MA153
D	642	Diode	MA153
D	643	Diode	MA153
D	644	Diode	MA3062(M)
D	645	Diode	MA3075(L)
D	646	Diode	MA3043(H)
D	647	Diode	MA152WK
D	661	Diode	ERA15-02VH
D	663	Diode	ERA15-02VH
D	671	Diode	MA152K
D	801	Diode	HZS9L(A2)
D	802	Diode	1SS270
D	803	Diode	1SS270
L	271	Ferri-Inductor	LAU2R2K
L	401	Ferri-Inductor	LAU2R2K
L	403	Ferri-Inductor	LAU2R2K
L	631	Ferri-Inductor	LAU2R2K
L	632	Ferri-Inductor	LAU101K
L	641	Ferri-Inductor	LAU2R2K
L	701	Ferri-Inductor	LAU101K
X	401	Crystal Resonator 7.200MHz	CSS1379
X	631	Ceramic Resonator 6.29MHz	CSS1310
X	701	Crystal Resonator 4.332MHz	CSS1056
S	631	Switch	CSG1020
VR	401	Semi-fixed 22kΩ(B)	CCP1321
FU	641	0.4A Fuse	ICP-N10
BZ	631	Buzzer	CPV1011
		FM/AM Tuner Unit	CWE1416

RESISTORS

Circuit Symbol & No.		Part Name	Part No.
R	201		RS1/10S222J
R	202		RS1/10S222J
R	203		RS1/10S223J
R	204		RS1/10S223J
R	205		RS1/10S332J
R	206		RS1/10S332J
R	207		RS1/10S122J
R	208		RS1/10S122J
R	209		RS1/10S472J
R	210		RS1/10S472J
R	211		RS1/10S472J
R	212		RS1/10S472J
R	213		RS1/10S272J
R	214		RS1/10S272J
R	215		RS1/10S151J
R	216		RS1/10S151J
R	241		RS1/10S0R0J
R	242		RS1/10S0R0J
R	245		RS1/10S0R0J
R	246		RS1/10S0R0J
R	247		See Contrast Table
R	248		See Contrast Table
R	251		RS1/10S821J
R	252		RS1/10S821J
R	253		RS1/10S104J
R	254		RS1/10S104J
R	261		RS1/10S181J
R	262		RS1/10S181J
R	263		RS1/10S223J
R	264		RS1/10S223J
R	265		RS1/10S102J
R	266		RS1/10S102J
R	271		RS1/10S102J
R	272		RS1/10S102J
R	273		RS1/10S473J
R	274		RS1/10S473J
R	275		RS1/10S101J
R	276		RS1/10S101J
R	277		RS1/10S620J
R	278		RS1/10S102J
R	281		RS1/10S223J
R	282		RS1/10S472J
R	283		RS1/10S222J
R	284		RS1/10S102J
R	301		See Contrast Table
R	302		See Contrast Table
R	303		See Contrast Table
R	304		See Contrast Table
R	305		RS1/10S182J
R	306		See Contrast Table
R	307		RS1/10S102J
R	351		RS1/10S473J
R	352		RS1/10S473J
R	353		RS1/10S821J
R	354		RS1/10S821J
R	402		RS1/10S272J
R	403		RS1/10S272J
R	404		RS1/10S222J
R	405		RS1/10S222J
R	406		RS1/10S102J
R	410		RS1/10S681J
R	411		RS1/10S682J
R	412		RS1/10S0R0J
R	413		RS1/10S102J
R	414		RS1/10S472J
R	415		RS1/10S682J
R	416		RS1/10S472J
R	418		RS1/10S561J
R	419		RS1/10S103J
R	420		RS1/10S152J
R	421		RS1/10S392J
R	422		RS1/10S392J
R	423		RS1/10S272J
R	427		RS1/10S473J
R	428		RS1/10S562J
R	431		RS1/10S473J
R	432		RS1/10S472J
R	433		RS1/10S473J
R	434		RS1/10S102J
R	435		RS1/10S102J

=====Circuit Symbol & No.===Part Name		Part No.
R	436	RS1/10S102J
R	437	RS1/10S102J
R	438	RS1/10S102J
R	439	RS1/10S472J
R	442	RS1/10S102J
R	446	RS1/10S393J
R	447	RS1/10S103J
R	449	RS1/10S102J
R	450	RS1/10S0R0J
R	451	RS1/10S473J
R	452	RS1/10S0R0J
R	469	RS1/10S0R0J
R	471	RS1/10S103J
R	472	RS1/10S223J
R	474	RS1/10S472J
R	475	RS1/10S224J
R	476	RS1/10S224J
R	477	RS1/10S224J
R	478	RS1/10S105J
R	479	RS1/10S103J
R	480	RS1/10S222J
R	481	RS1/10S0R0J
R	601	RS1/10S223J
R	602	RS1/10S473J
R	603	RS1/10S473J
R	604	RS1/10S223J
R	605	RS1/10S473J
R	606	RS1/10S473J
R	607	RS1/10S103J
R	608	RS1/10S103J
R	609	RS1/10S473J
R	610	RS1/10S473J
R	621	RS1/10S101J
R	622	RS1/10S472J
R	623	RS1/10S473J
R	624	RS1/10S472J
R	625	RS1/10S471J
R	626	RS1/10S103J
R	627	RS1/10S222J
R	628	RS1/10S103J
R	629	RS1/10S222J
R	631	RS1/10S473J
R	633	RS1/10S473J
R	636	RS1/10S473J
R	637	RS1/10S152J
R	638	RS1/10S152J
R	639	RS1/10S822J
R	640	RS1/10S472J
R	641	RS1/10S472J
R	642	RS1/10S472J
R	643	RS1/10S222J
R	644	RS1/10S472J
R	645	RS1/10S472J
R	646	RS1/10S222J
R	647	RS2PMF6R8J
R	648	RS1/4S681J
R	650	RS1/10S473J
R	651	RS1/10S472J
R	653	RS1/10S471J
R	654	RS1/10S102J
R	655	RS1/10S224J
R	656	RS1/10S204J
R	657	RS1/10S222J
R	658	RD1/4PU152J
R	661	RS1/10S222J

=====Circuit Symbol & No.===Part Name		Part No.
R	662	RS1/10S223J
R	665	RS1/10S103J
R	671	RS1/10S473J
R	672	RS1/10S473J
R	673	RS1/10S473J
R	674	RS1/10S473J
R	675	RS1/10S473J
R	676	RS1/10S473J
R	679	RA4C222J
R	680	RA3C222J
R	681	RA4C681J
R	683	RS1/10S222J
R	684	RS1/10S222J
R	688	RS1/10S473J
R	692	RS1/10S102J
R	694	RD1/4PU102J
R	695	RS1/10S222J
R	696	RD1/4PU102J
R	698	RS2PMF220J
R	699	RD1/4PU152J
R	702	RS1/10S333J
R	703	RS1/10S0R0J
R	704	RS1/10S102J
R	705	RS1/10S102J
R	706	RS1/10S102J
R	707	RS1/10S102J
R	708	RS1/10S102J
R	709	RS1/10S102J
R	715	RS1/10S562J
R	716	RS1/10S104J
R	717	RS1/10S104J
R	718	RS1/10S102J
R	725	RS1/10S562J
R	726	RS1/10S222J
R	728	RS1/10S473J
R	731	RS1/10S681J
R	732	RS1/10S684J
R	733	RS1/10S222J
R	734	RS1/10S222J
R	735	RS1/10S562J
R	801	RS1/10S223J
R	802	RS1/10S103J
R	803	RS1/10S472J

CAPACITORS

C	201	CEJA4R7M35
C	202	CEJA4R7M35
C	203	CEJA4R7M35
C	204	CEJA4R7M35
C	205	CEJANP4R7M16
C	206	CEJANP4R7M16
C	207	CEJANP100M10
C	208	CEJANP100M10
C	209	CKSQYB822K50
C	210	CKSQYB822K50
C	211	CEJA1R0M50
C	212	CEJA1R0M50
C	217	CKSQYB183K50
C	218	CKSQYB183K50
C	219	CKSQYB102K50
C	220	CKSQYB102K50
C	221	CEJANP2R2M35
C	222	CEJANP2R2M35
C	223	CKSQYB333K50
C	224	CKSQYB333K50

=====Circuit Symbol & No.===Part Name			Part No.
C	227		CEJA220M16
C	228		CEJA2R2M50
C	231		CKSQYB104K50
C	232		CEJA470M10
C	233		CKSQYB104K50
C	234		CKSQYB103K50
C	251		CEJA2R2M50
C	252		CEJA2R2M50
C	261		CEJA1R0M50
C	262		CEJA1R0M50
C	263		CEJA1R0M50
C	264		CEJA1R0M50
C	265		CEJA100M16
C	266		CEJA100M16
C	271		CKSQYB102K50
C	281		CKSQYB104K50
C	282		CKSQYB102K50
C	301		See Contrast Table
C	302		See Contrast Table
C	303		See Contrast Table
C	304		See Contrast Table
C	305		See Contrast Table
C	306		See Contrast Table
C	307		See Contrast Table
C	308		See Contrast Table
C	311		See Contrast Table
C	312		See Contrast Table
C	313		See Contrast Table
C	314		See Contrast Table
C	321		CKSQYB104K50
C	322	4700µF/16V	CCH1188
C	323		See Contrast Table
C	324		See Contrast Table
C	325		See Contrast Table
C	326		See Contrast Table
C	351		CEJA2R2M50
C	352		CEJA2R2M50
C	401		CKSQYB223K50
C	402		CKSQYB273K50
C	403		CKSQYB103K50
C	404		CKSQYB223K50
C	406		CKSQYB102K50
C	408		CEJA220M16
C	410		CKSQYB103K50
C	411		CEJA220M6R3
C	412		CEJA220M16
C	413		CKSQYB103K50
C	414	4.7µF/16V	CCH1250
C	416		CKSQYB103K50
C	417		CKLSR473K16
C	418		CKSQYB103K50
C	420		CKSQYB103K50
C	421		CKSQYB103K50
C	422		CEJA220M6R3
C	423		CKSQYB102K50
C	424	4.7µF/16V	CCH1250
C	425		CKSQYB103K50
C	426		CEJAR47M50
C	427		CCSQCH150K50
C	428		CCSQCH150K50
C	429		CKSQYB223K50
C	430		CKSQYB223K50
C	434		CCSQCH101K50
C	435		CEJA2R2M50
C	436		CEJA2R2M50

=====Circuit Symbol & No.===Part Name			Part No.
C	437		CKSQYB223K50
C	438		CKSQYB223K50
C	439		CCSQCH101K50
C	440		CKSQYB223K50
C	441		CKSQYB471K50
C	442		CKSQYB103K50
C	443		CKSQYB103K50
C	444		CKSQYB103K50
C	449		CKSQYB332K50
C	450		CKSQYB102K50
C	451		CKSQYB102K50
C	601		CKSYB105K16
C	612		CEJA100M16
C	621	1500µF/16V	CCH1201
C	622		CKSQYB103K50
C	623		CEJA470M10
C	624		CEJA101M10
C	625		CKSQYB103K50
C	626		CKSQYB473K50
C	627		CEJA101M10
C	635		CEJA4R7M35
C	636		CKSQYB103K50
C	637		CKSQYB103K50
C	640		CEJA2R2M50
C	641		CCSQCH101K50
C	642		CCSQCH101K50
C	643		CEAS471M10
C	644		CKSQYB103K50
C	645		CCSQCH101K50
C	661		CKSQYB473K50
C	671		CEJA100M16
C	674		CCSQCH101K50
C	676		CCSQCH101K50
C	677		CCSQCH101K50
C	678		CKSQYB102K50
C	679		CKSYB102K50
C	701		CKSQYB104K50
C	702		CKSQYB222K50
C	703		CKSQYB104K50
C	704		CKSYB105K16
C	705		CKSQYB104K50
C	706		CKSQYB472K50
C	707		CEJA4R7M35
C	708		CKSQYB104K50
C	709		CCSQCH220J50
C	710		CCSQCH220J50
C	711		CKSQYB104K50
C	712		CKSQYB223K50
C	714		CEJA4R7M35
C	735		CKSQYB102K50
C	736		CEJA4R7M35
C	737		CKSQYB103K50
C	405		CKSRYB333K16

Keyboard Unit
Consists of Keyboard PCB Switch PCB

D G Unit Number : CWM5348
Unit Name : Keyboard Unit

MISCELLANEOUS

IC	901	IC	PD6208B
IC	902	HIC Module	RS-140
Q	901	Transistor	2SC2712
D	901	Diode	MA153
D	902	Diode	MA153

=====Circuit Symbol & No.===Part Name			Part No.
D	903	LED	CL170PGCD
D	904	LED	CL170PGCD
D	905	LED	CL170PGCD
L	901	Inductor	LCTA4R7J3225
X	901	Ceramic Resonator 4.915MHz	CSS1084
S	641	Switch	CSN1027
S	901	Push Switch	CSG1085
S	902	Push Switch	CSG1085
S	903	Push Switch	CSG1085
S	904	Push Switch	CSG1084
S	905	Push Switch	CSG1084
S	906	Push Switch	CSG1084
S	907	Push Switch	CSG1084
S	908	Push Switch	CSG1085
S	909	Push Switch	CSG1084
S	910	Push Switch	CSG1084
S	911	Push Switch	CSG1084
S	912	Push Switch	CSG1084
S	913	Push Switch	CSG1084
S	914	Switch	CSG1043
S	915	Push Switch	CSG1085
S	916	Push Switch	CSG1084
S	917	Push Switch	CSG1085
S	918	Push Switch	CSG1084
S	919	Push Switch	CSG1085
S	920		CSG1084
S	921	Switch	CSG1043
LCD	901	LCD	CAW1422
RESISTORS			
R	901		RS1/10S222J
R	902		RS1/10S222J
R	903		RS1/10S472J
R	905		RS1/10S121J
R	907		RS1/10S470J
R	908		RS1/10S470J
R	909		RS1/10S2R2J
R	910		RS1/10S470J
R	911		RS1/10S470J
R	912		RS1/10S470J
R	913		RS1/10S470J
R	914		RS1/10S103J
R	916		RS1/8S152J
R	917		RS1/8S152J
R	918		RS1/8S391J
R	920		RS1/8S391J
R	922		RS1/8S391J
R	924		RS1/8S391J
R	926		RS1/8S391J
R	928		RS1/8S391J
R	930		RS1/8S391J
CAPACITORS			
C	901		CSZSR100M6R3
C	903		CSZSR100M6R3
C	904		CKSQYB104K50
C	905		CKSQYB103K50
C	906		CKSQYB103K50
C	907		CKSQYB103K50

C Unit Number :EWM1010
Unit Name :Deck Unit

MISCELLANEOUS			
IC	251	IC	HA12192F
IC	351	IC	PA2020A
Q	271	Transistor	2SC4116
Q	351	Transistor	2SB1260
Q	352	Transistor	2SC4102

=====Circuit Symbol & No.===Part Name			Part No.
Q	401	Transistor	DTC114EU
D	351	Diode	1SS355
VR	301	Semi-fixed 33kΩ(B)	CCP1280
VR	302	Semi-fixed 33kΩ(B)	CCP1280
RESISTORS			
R	255		RS1/16S181J
R	256		RS1/16S181J
R	257		RS1/16S183J
R	258		RS1/16S183J
R	259		RS1/16S133J
R	260		RS1/16S133J
R	261		RS1/16S274J
R	262		RS1/16S274J
R	271		RS1/16S183J
R	275		RS1/16S473J
R	276		RS1/16S104J
R	277		RS1/16S224J
R	278		RS1/16S104J
R	281		RS1/8S0R0J
R	282		RS1/8S0R0J
R	283		RS1/8S0R0J
R	284		RS1/8S0R0J
R	285		RS1/16S0R0J
R	286		RS1/16S0R0J
R	287		RS1/16S0R0J
R	288		RS1/8S0R0J
R	289		RS1/8S0R0J
R	290		RS1/8S0R0J
R	301		RS1/16S0R0J
R	321		RS1/8S0R0J
R	351		RS1/16S102J
R	352		RS1/16S102J
R	353		RS1/16S102J
R	354		RS1/16S102J
R	355		RS1/10S274J
R	356		RS1/10S202J
R	357		RS1/10S472J
R	358		RS1/10S103J
R	359		RS1/10S103J
R	360		RS1/10S102J
R	361		RS1/10S622J
R	362		RS1/8S181J
R	373		RS1/8S0R0J
R	374		RS1/8S0R0J
R	375		RS1/8S0R0J
R	401		RS1/16S123J
R	402		RS1/16S332J
R	403		RS1/16S911J
R	404		RS1/16S274J
R	421		RS1/8S0R0J
CAPACITORS			
C	251		CKSRYB391K50
C	252		CKSRYB391K50
C	253		CKSRYB391K50
C	254		CKSRYB391K50
C	255		CKSRYB103K50
C	256		CKSRYB103K50
C	271		CEJA1R0M50
C	272		CKSQYB104K16
C	301		CKSYB474K16
C	302		CKSYB474K16
C	303		CKSQYB104K16
C	304		CKSQYB104K16
C	351		CKSYB224K25
C	352		CKSQYB392K50
C	353		CKSQYB103K50

=====Circuit Symbol & No.===Part Name			Part No.
C	354		CKSQYB473K50
C	355		CKSYB104K50
C	356		CKSQYB103K50
C	401		CKSRYB472K50
C	402		CEJA1R0M50
C	403		CKSRYB223K25
C	404		CKSRYB103K50
C	405		CKSRYB333K16

E Unit Number :
Unit Name :PCB Unit

S	1	Switch (Load)	ESG1004
S	2	Switch (70μS)	ESG1004
EGN	1	Photo-Interrupter	EGN1005

F Unit Number :
Unit Name :Reel PCB

EGN	2	Photo-Interrupter	EGN1006
EGN	3	Photo-Interrupter	EGN1006

Miscellaneous Parts List

M	1	Motor Unit (Main)	EXA1491
M	2	Motor Unit (Sub)	EXA1485
HD	1	Head Assy	EXA1506

CONTRAST TABLE of TUNER AMP UNIT

KEH-P6600R/EW and KEX-P66R/EW have the same construction except for the following:

Symbol & Description		Part No. KEH-P6600R/EW	Part No. KEX-P66R/EW
Tuner Amp Unit		CWM5318	CWM5442
IC 551	IC	TDA7384A	Not used
Q 301	Transistor	DTC124EK	Not used
Q 355	Transistor	Not used	IMH3A
R 247,248		RS1/10S0R0J	Not used
R 301		RS1/10S103J	Not used
R 302		RS1/10S221J	Not used
R 303		RS1/10S153J	Not used
R 304		RS1/10S103J	Not used
R 306		RS1/10S101J	Not used
R 355,356		Not used	RS1/10S821J
R 357,358		Not used	RS1/10S473J
C 301,302,303,304		CKSQYB102K50	Not used
C 305,306,307,308		CKSQYB102K50	Not used
C 311,312,313,314		CEJAR22M50	Not used
C 323		CEJA100M16	Not used
C 324,325		CEJA1R0M50	Not used
C 326		CEJA330M10	Not used
C 327		Not used	CKSYB103K50
C 354,355		Not used	CEJA2R2M50

6. ADJUSTMENT

● Connection Diagram

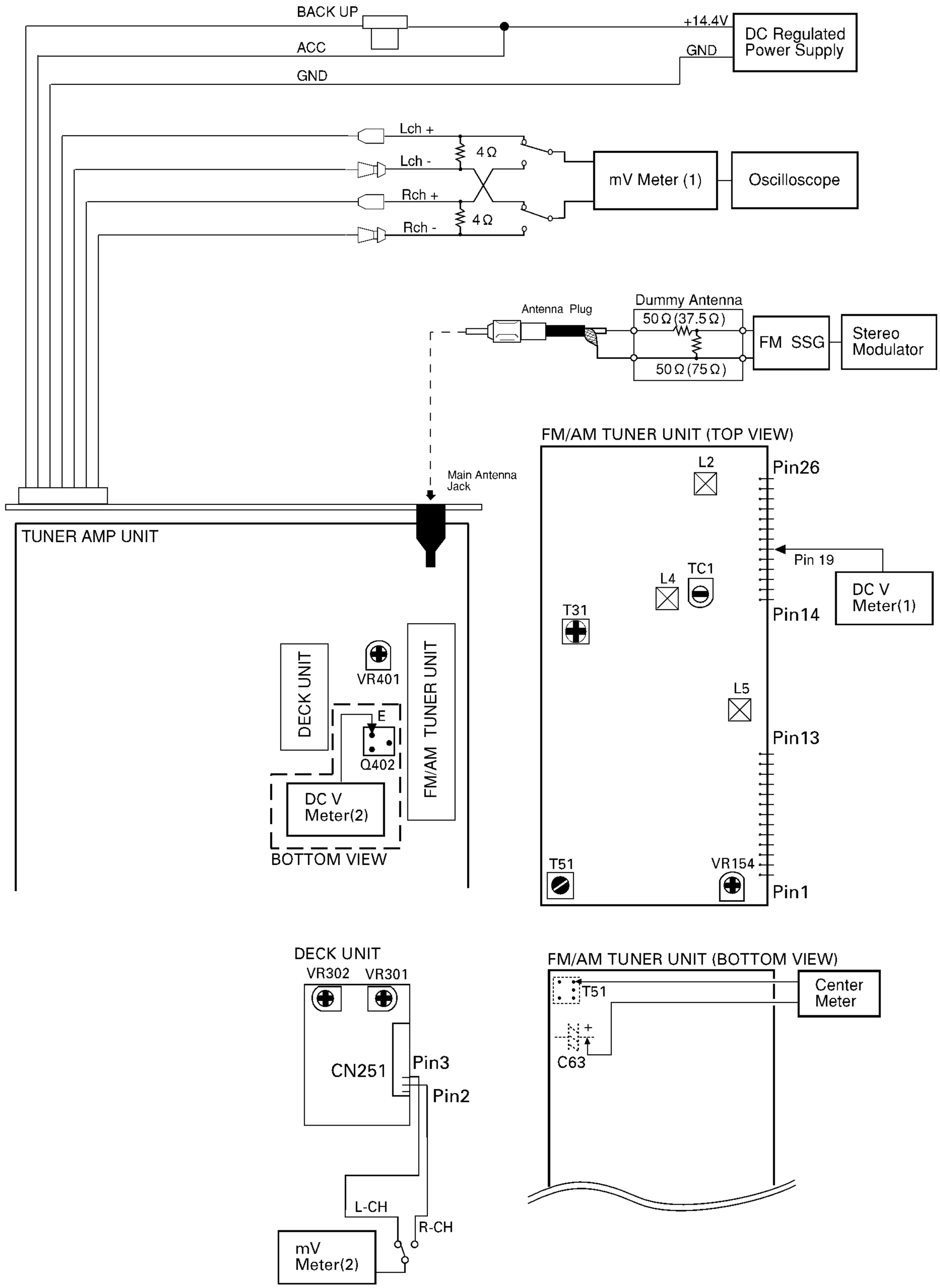

Fig. 24

FM ADJUSTMENT

Modulation M:MONO MOD., 400Hz 30%(22.5kHz Dev.) or 400Hz 100%(75kHz Dev.)
S1:STEREO MOD., 1kHz, L or R=30%(20.25kHz+7.5kHz Dev.)
S2:STEREO MOD., 1kHz, L or R=60%(40.50kHz+7.5kHz Dev.)

NOTE:Before proceeding to further adjustments after switching power ON, let the tuner run for ten minutes to allow the circuits to stabilize.

	No.	FM SSG		Displayed	Adjustment	Adjustment Method
		Frequency(MHz)	Level(dBf)	Frequency(MHz)	Point	(Switch Position)
TUN Volt	1	•••••	•••••	108.0	L5	DC V Meter(1) : 6V
IF	2	98.1 M	60	98.1	T51	Center Meter : 0
ANT Coil	3	98.1 M	5	98.1	L2	mV Meter(1) : Maximum
RF Coil	4	98.1 M	5	98.1	L4	mV Meter(1) : Maximum
Image	5	129.3 M	60—80	107.9	TC1	mV Meter(1) : Minimum
IFT	6	98.1 M	5	98.1	T31	mV Meter(1) : Maximum (STEREO MODE)
ARC	7	98.1 S1	40	98.1	VR154	mV Meter(1) : Separation 5dB (STEREO MODE)

RDS SL ADJUSTMENT

	No.	FM SSG		Displayed	Adjustment	Adjustment Method
		Frequency(MHz)	Level(dBf)	Frequency(MHz)	Point	(Switch Position)
	1	104.0 S2	35	104.0	VR401	DC V Meter(2) : 1.75V±0.05V

DOLBY B NR ADJUSTMENT

No.	Test Tape	Adjustment Point	Adjustment Method (Switch Position)
1	NCT-150 (400Hz,200nwb/m)	VR301(Lch),VR302(Rch)	mV Meter(2) : –8.24dBs±1.0dB (DOLBY NR Switch : OFF)

- **For Repair of the Detach Grille Assy, Use the Extension-Cord Tool GGD1056.**
- **For Repair of the Cassette Mechanism Module, Use the Extension-Cord Tool GGD1121.**

7. GENERAL INFORMATION

7.1 PARTS

7.1.1 IC

PA4023B

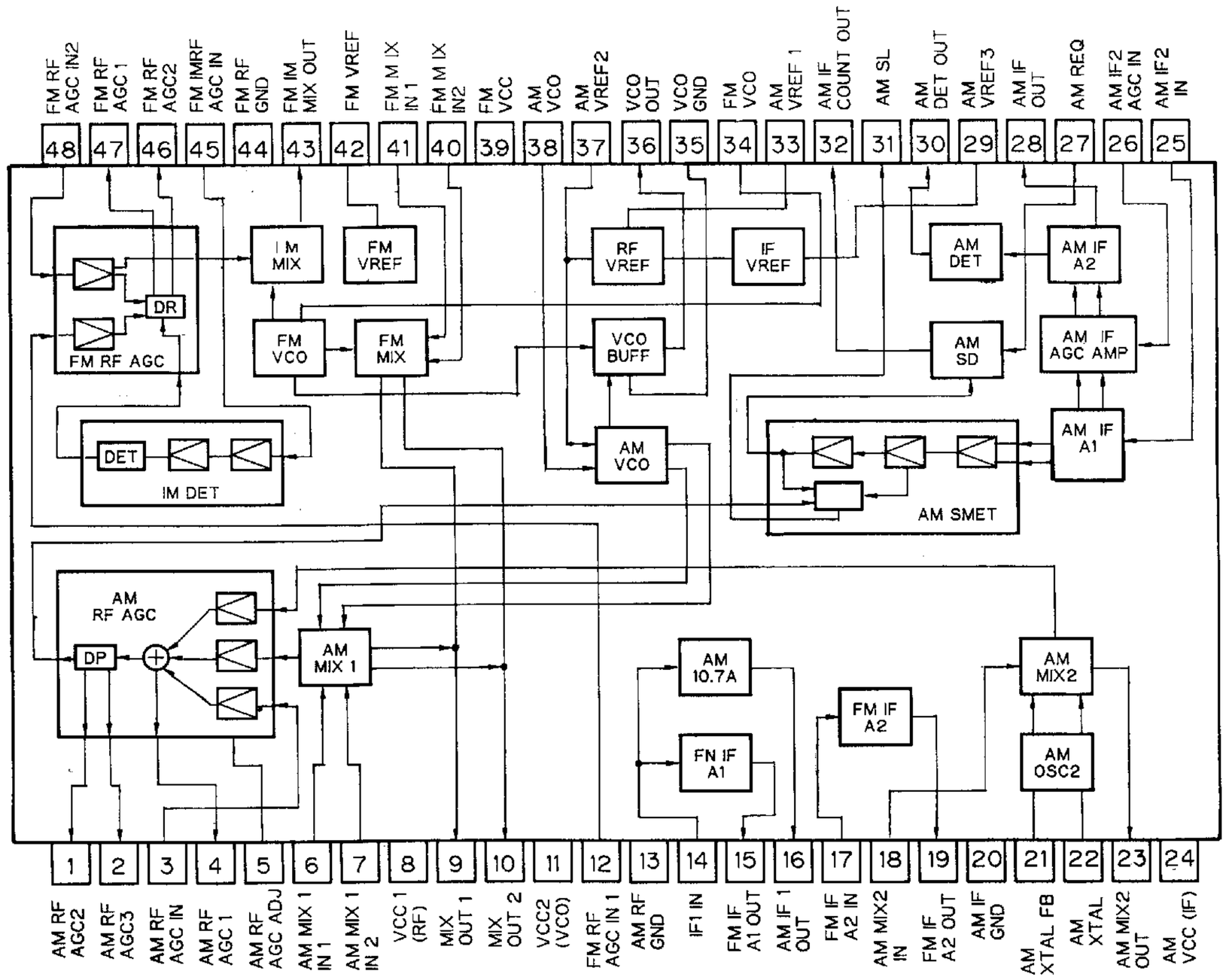

*SN761027DL

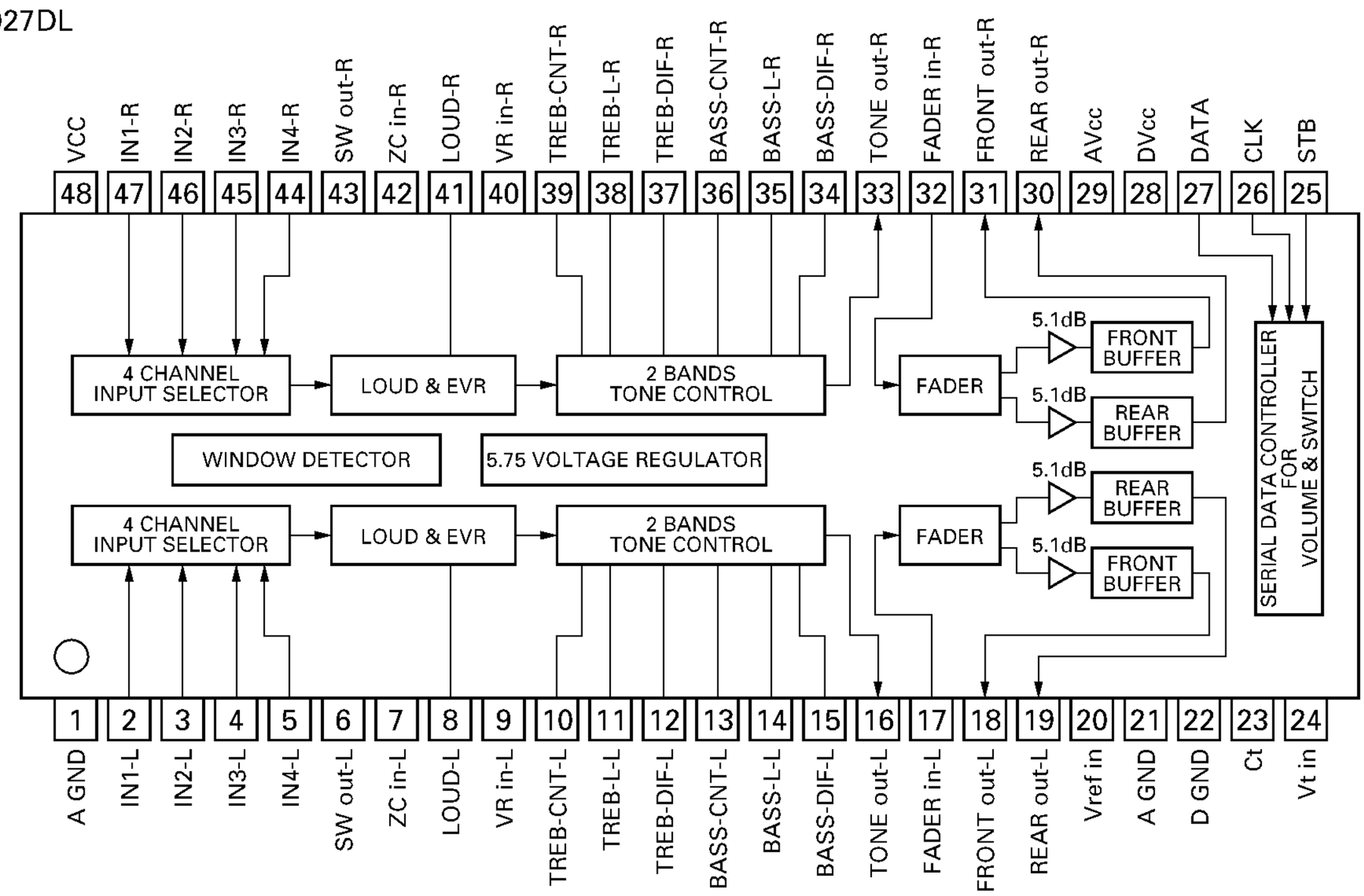

IC's marked by are MOS type.*
Be careful in handling them because they are very liable to be damaged by electrostatic induction.

TDA7384A

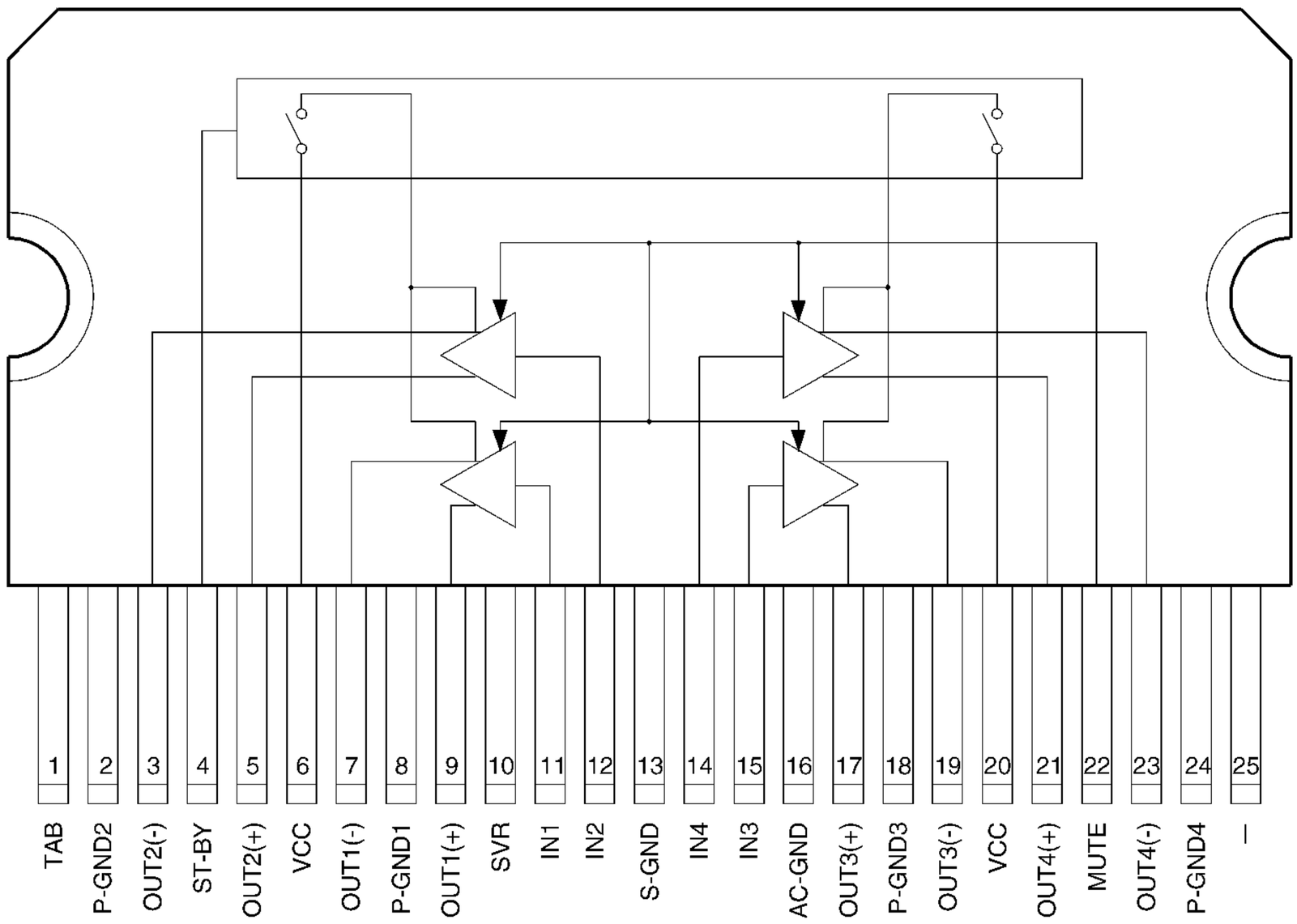

PM2005B

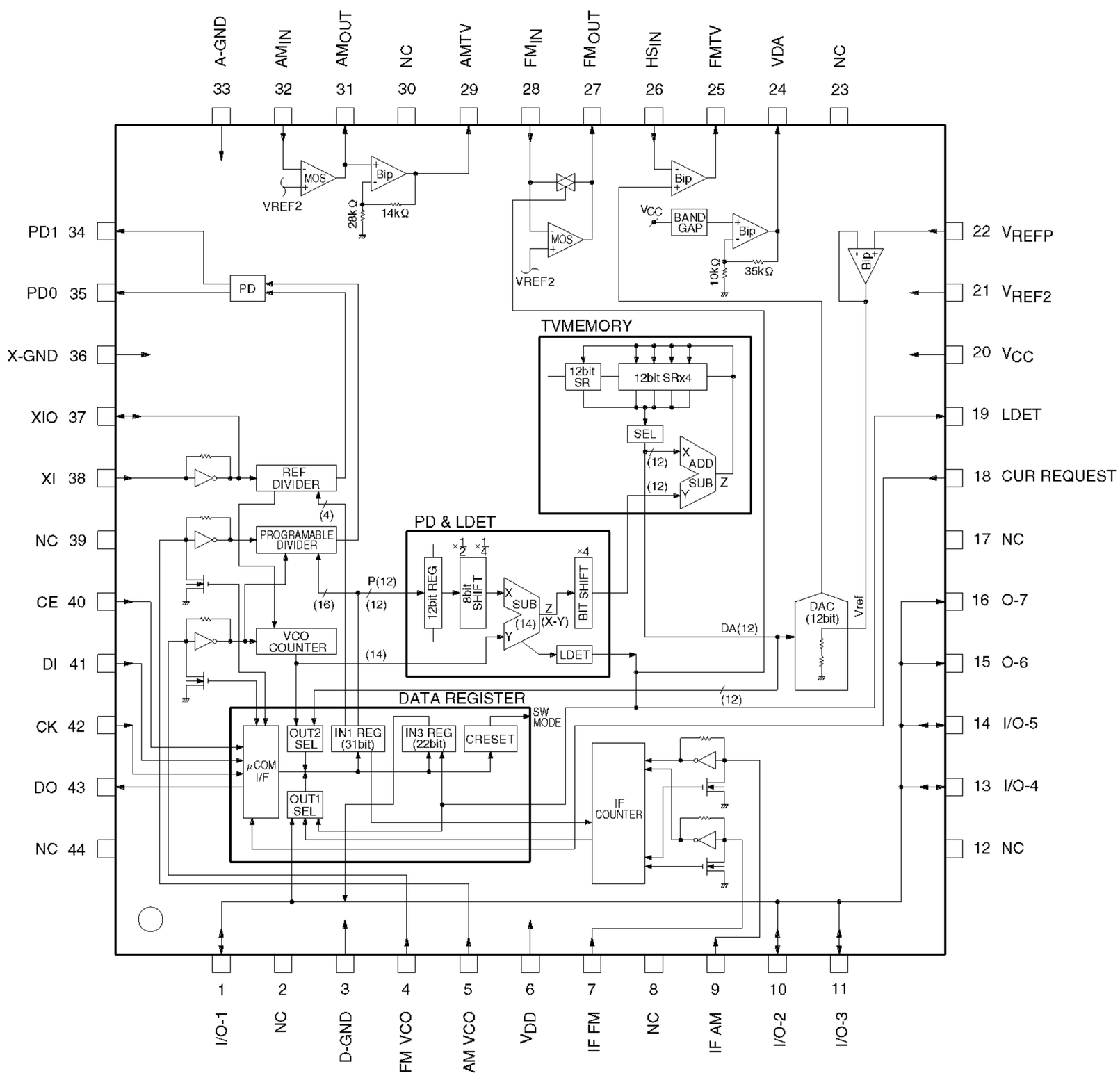

● Pin Functions(PD4773A)

Pin No.	Pin Name	I/O	Format	Function and Operation
1	$\overline{\text{CLOSE}}$	I		Flap close sense input
2	RDT	I		FROM data input
3	RDSLK	I		RDS LK signal input
4	AVSS			A/D GND
5	$\overline{\text{DRST}}$	O	C	Reset output
6	NC			Not used
7	AVREF1			(Connect to VDD)
8	KYDT	I		Key data input
9	DPDT	O	C	Display data output
10	$\overline{\text{SWVDD}}$	O	C	Grille power supply control output
11	$\overline{\text{MDSENS}}$	I		Modulation detect input
12	NC			Not used
13	$\overline{\text{CURRRQ}}$	O	C	Tuner voltage FIX output
14	MSIN	I		MS sense input
15	$\overline{\text{MTLSW}}$	I		Metal sense input
16	POS	I		Position sense input
17	RES	I		Cassette mechanism reverse end sense input
18	NES	I		Cassette mechanism forward end sense input
19	DIRO	O	C	Head F/R select output
20	PLAY	O	C	MS gain select output
21	DIM	O	C	Dimmer select output
22	NR	O	C	NR output
23	SC2	O	C	Cassette mechanism sub motor control output
24	SC1	O	C	Cassette mechanism sub motor control output
25	CM	O	C	Cassette mechanism capstan motor control output
26	$\overline{\text{STBY}}$	O	C	Drive IC control output
27	LOADSW	I		Tape loading input
28	LPFSW	O	C	FIE output
29	TUNPDI	I		PLL IC data input
30	TUNPCK	O	C	PLL IC clock output
31	TUNPDO	O	C	PLL IC data output
32	TUNPCE	O	C	PLL IC chip enable output
33	VSS			GND
34	ST	I		Stereo input
35	$\overline{\text{TMUTE}}$	O		Tuner mute output
36	SD	I		SD input
37–40	NC			Not used
41	ASENBO	O	C	Slave power supply control output
42	NC			Not used
43	AM	O	C	AM power control output
44	$\overline{\text{MUTE}}$	O	C	Mute output
45	PEE	O	C	PEE sound output
46	VST	O	C	Electronic volume strobe pulse output
47	RDS57K	I		57kHzBP-OUT sense input
48	VCK	O	C	Electronic volume clock output
49	VDT	O	C	Electronic volume data output
50	FM	O	C	FM power control output
51	SYSPW	O	C	System power supply control output
52	NC			Pull down
53	NC			Not used
54	$\overline{\text{ISENS}}$	I		Illumination sense input
55	NC			Not used
56	TX	O	C	IP BUS data output
57	RX	I		IP BUS data input
58,59	NC			Open
60	$\overline{\text{RESET}}$	I		Reset input
61	$\overline{\text{LDET}}$	I		PLL lock sense input
62	$\overline{\text{RCK}}$	I		RDS clock input

Pin No.	Pin Name	I/O	Format	Function and Operation
63	$\overline{\text{BSENS}}$	I		Back up power sense input
64	$\overline{\text{ASENS}}$	I		ACC power sense input
65	$\overline{\text{DSENS}}$	I		Grille detach sense input
66	CLKIN	I		Clock input
67	ILMPW	O	C	Illumination power supply control output
68	VDD			Power supply
69	X2			Crystal oscillator connection pin
70	X1			Crystal oscillator connection pin
71	IC			Connect to GND
72	NC			Not used
73	TESTIN	I		Test program mode input
74	AVDD	I		Positive power supply terminal for analog circuit input
75	NC			Not used
76	SL	I		Signal level input
77	NL	I		Noise level input
78	SLIN	I		RDS SL input
79	SK	I		SK signal input
80	LCDPW	O	C	LCD back light power supply control output

*PD4773A

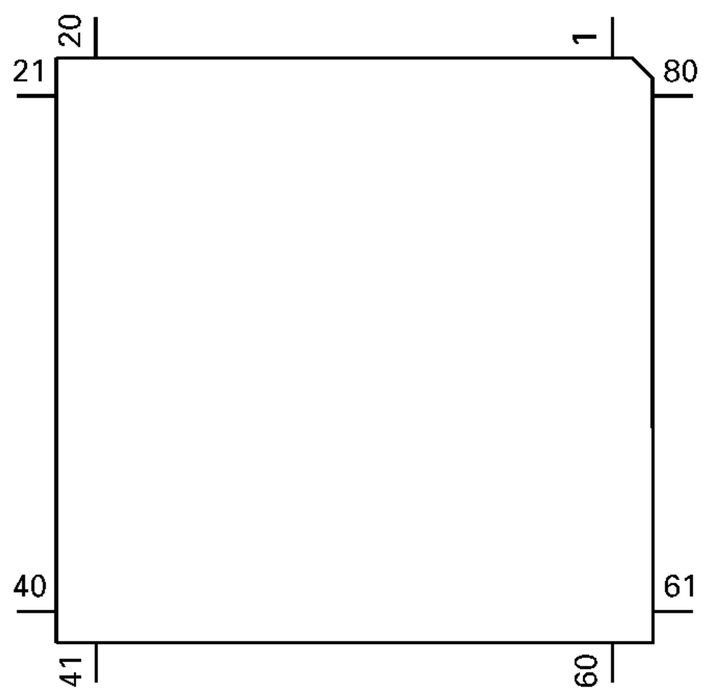

Format	Meaning
C	C MOS

PMW001B

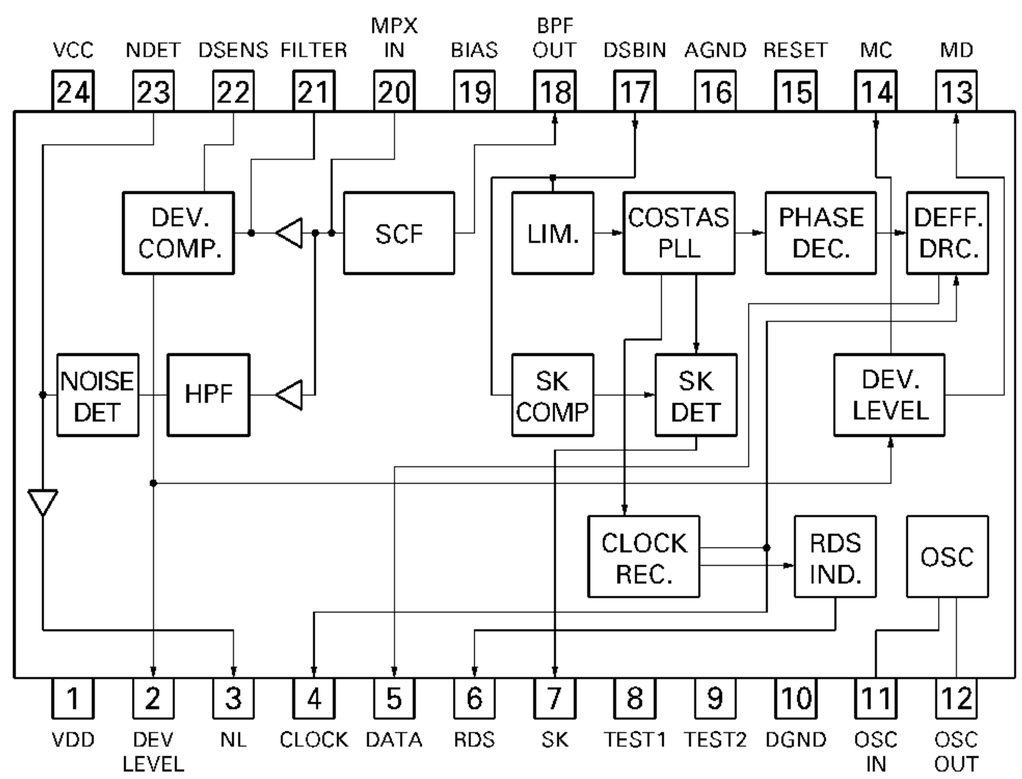

HA12192F

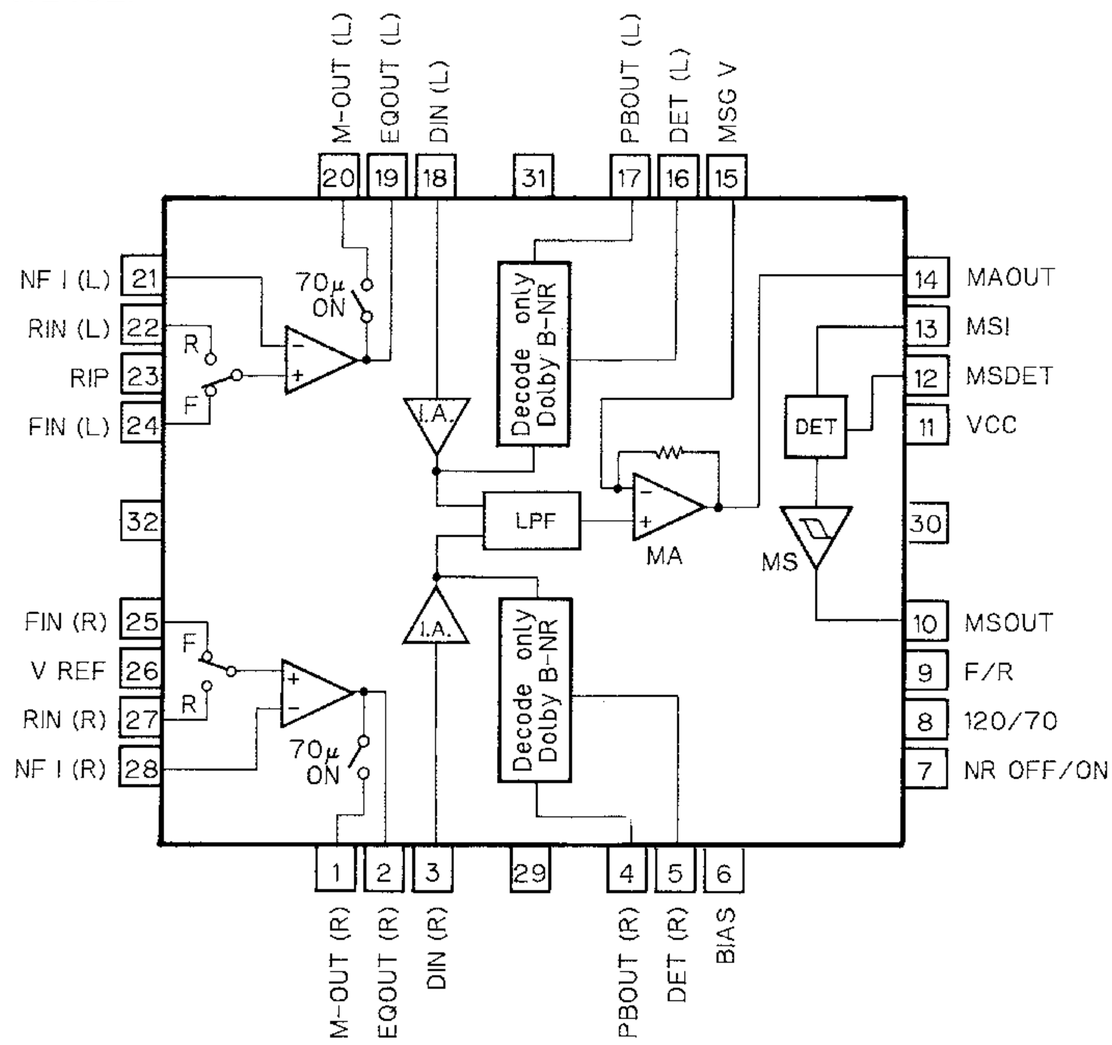

● Pin Functions(PD6208B)

Pin No.	Pin Name	I/O	Format	Function and Operation
1	VSS			GND
2	X1			Crystal oscillator connection pin
3	X0			Crystal oscillator connection pin
4	$\overline{RST}$	I		System reset input
5	MOD1	I		Operation mode appointment input 1
6	MOD0	I		Operation mode appointment input 0
7	LED	O	C	LED control output
8	SO	O	C	UART output
9	SI	I		UART input
10	REM	I		Remote control reception input
11,12	NC			Not used
13–16	KD4-1	I		Matrix key return input 4-1
17–22	KS6-1	O	N	Matrix key strobe output 6-1
23	VCC			5V power supply
24–73	SEG49-0	O		LCD segment signal output 49-0
74–77	COM3-0	O		LCD common signal output 3-0
78	V3			LCD bias power supply
79	V2			LCD bias power supply
80	V1			LCD bias power supply

*PD6208B

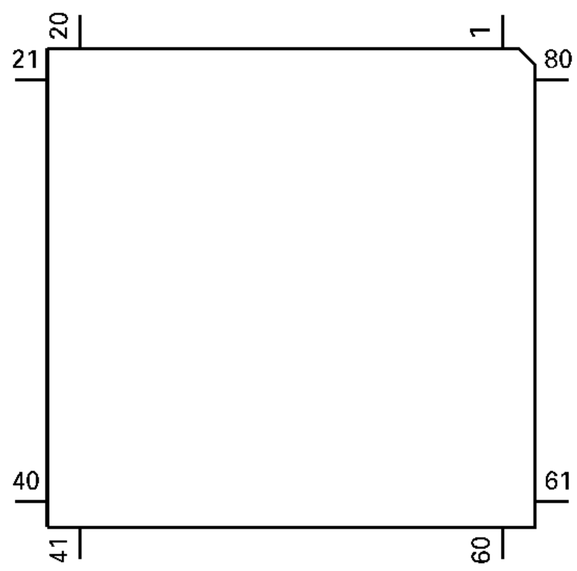

Format	Meaning
C	C MOS
N	N channel open drain

RS-140

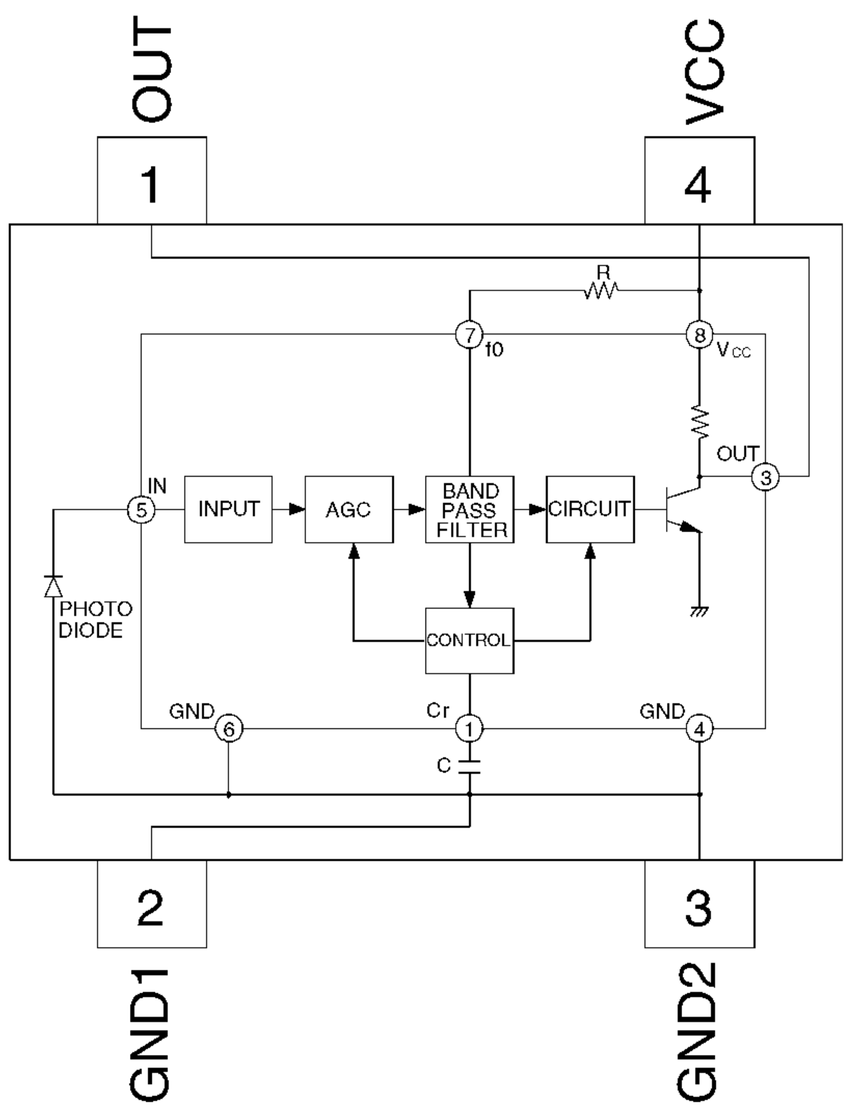

7.1.2 DISPLAY

● **CAW1422**

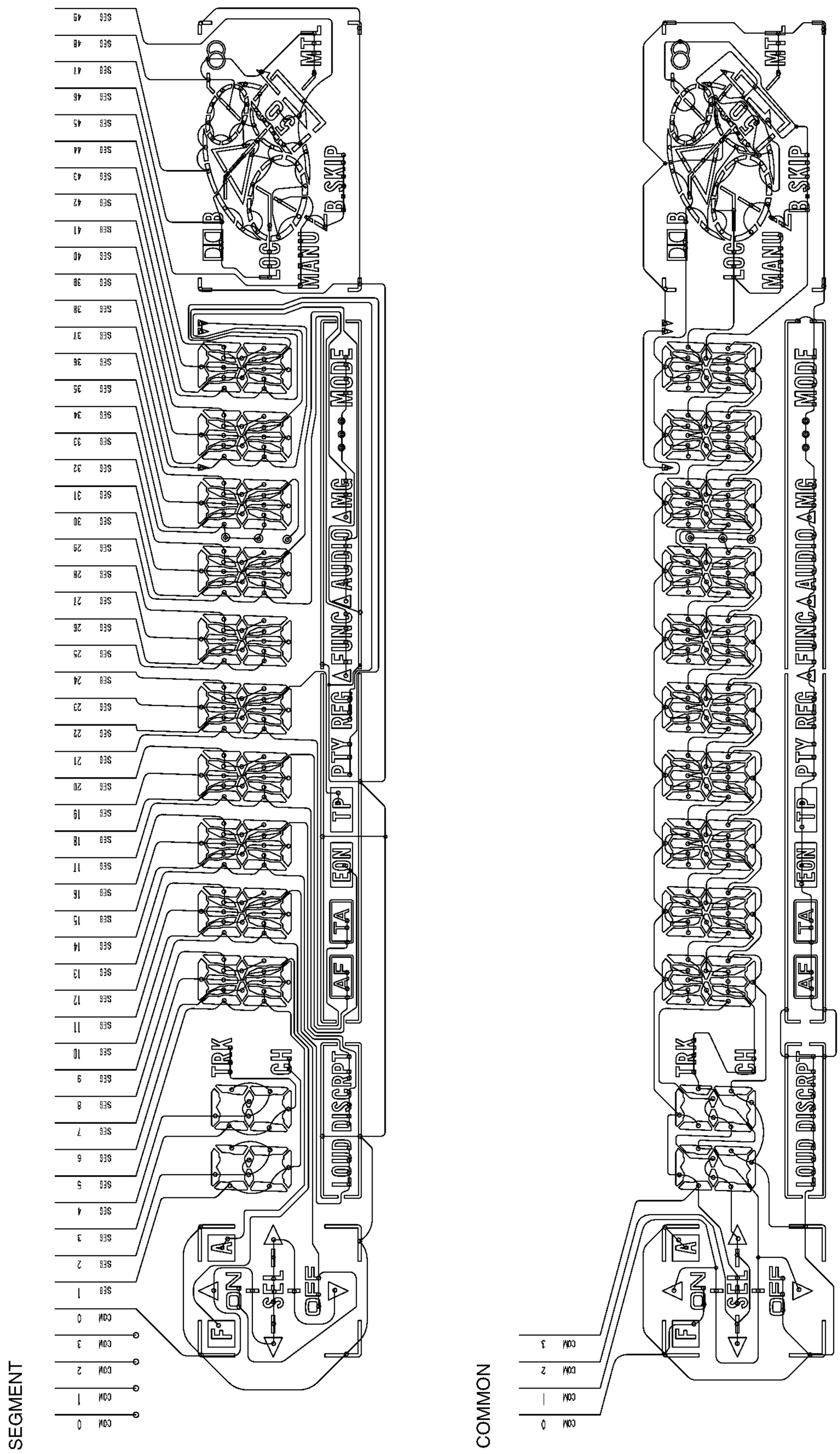

Fig. 25

7.2 DISASSEMBLY

● Removing the Case(Not shown)

1. Remove the three screws.
2. Insert and turn a flat screwdriver to remove the case.

● Removing the Cassette Mechanism Module (Not shown)

1. Remove the four screws.
2. Disconnect the connector.
3. Remove the Cassette Mechanism Module.

● Removing the Detach Grille Assy(Fig.26)

1. Remove the two screws A, and disconnect the two connectors.
2. Disengage the stoppers at four locations indicated by arrows.
3. Remove the Detach Grille Assy.

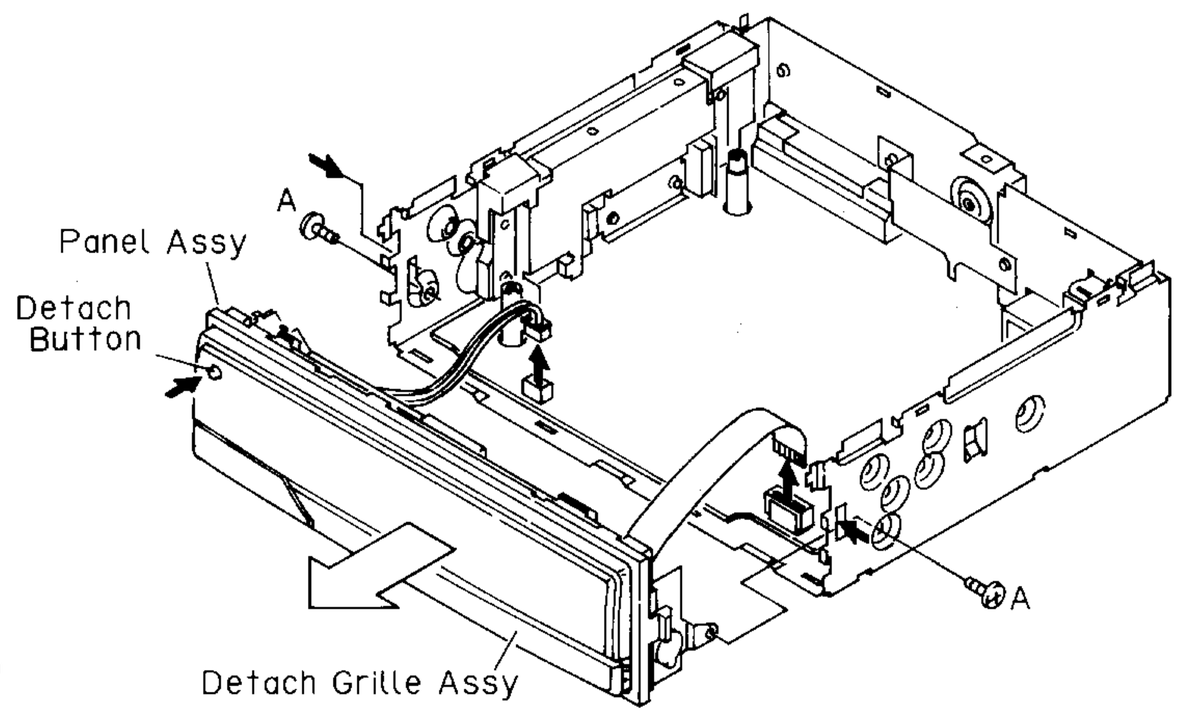

Fig. 26

● Removing the Tuner Amp Unit(Fig.27)

1. Remove the two screws B, and three screws C.
2. Unbend the tabs at three locations indicated by arrows until straight.
3. Raise up on Tuner Amp Unit.

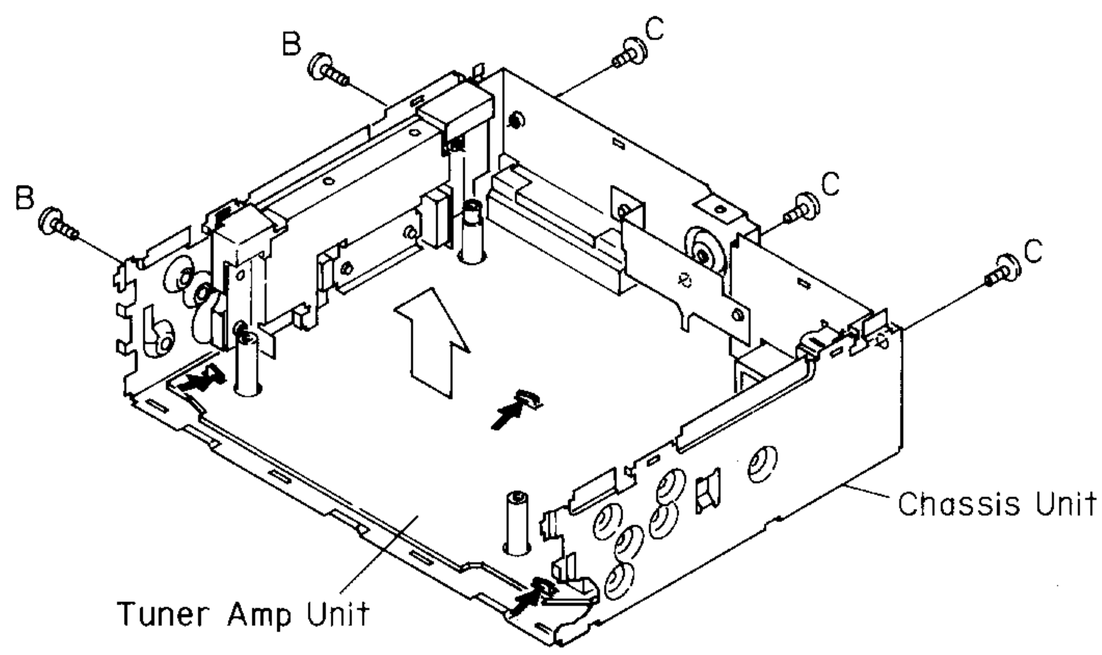

Fig. 27

7.3 BLOCK DIAGRAM

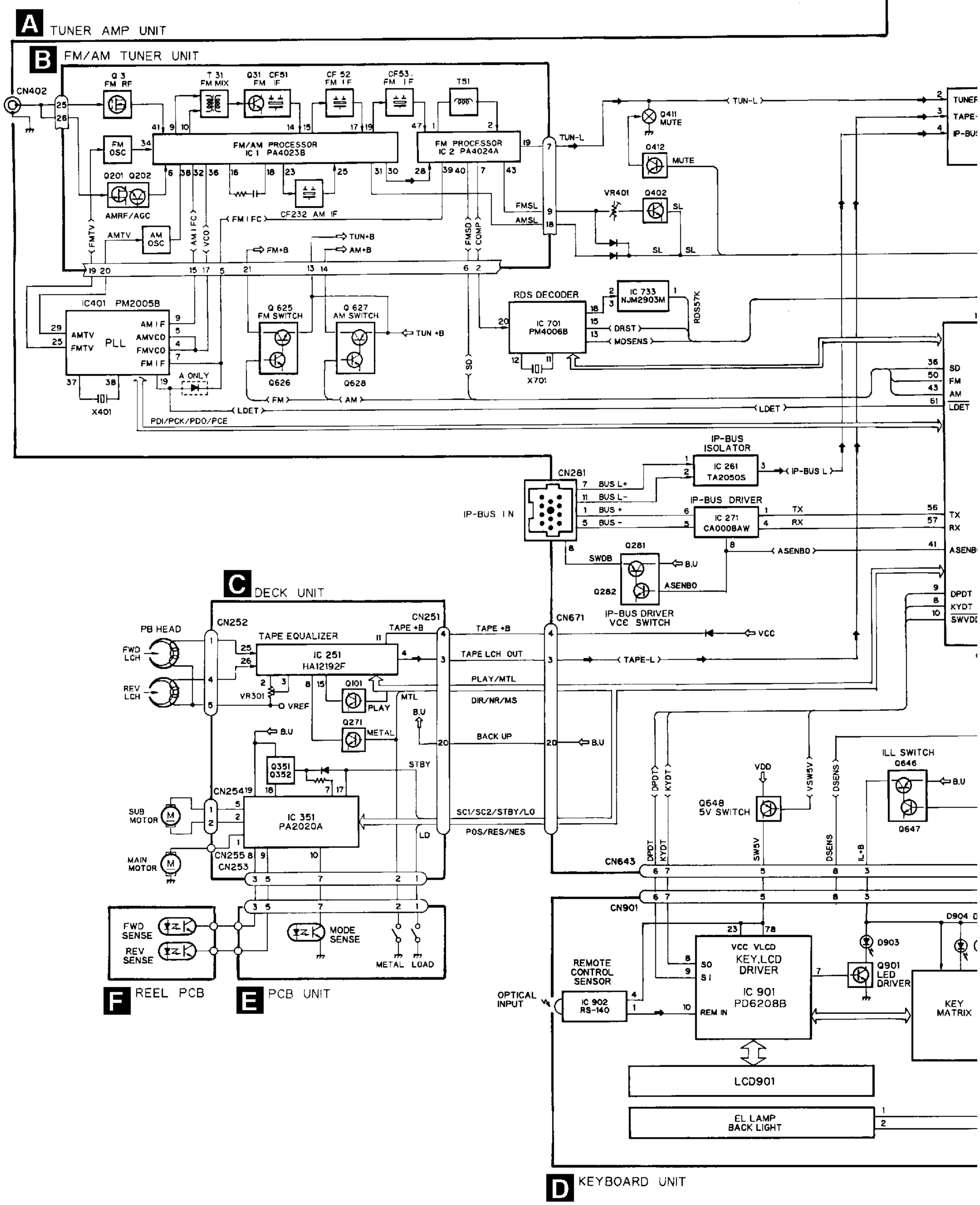

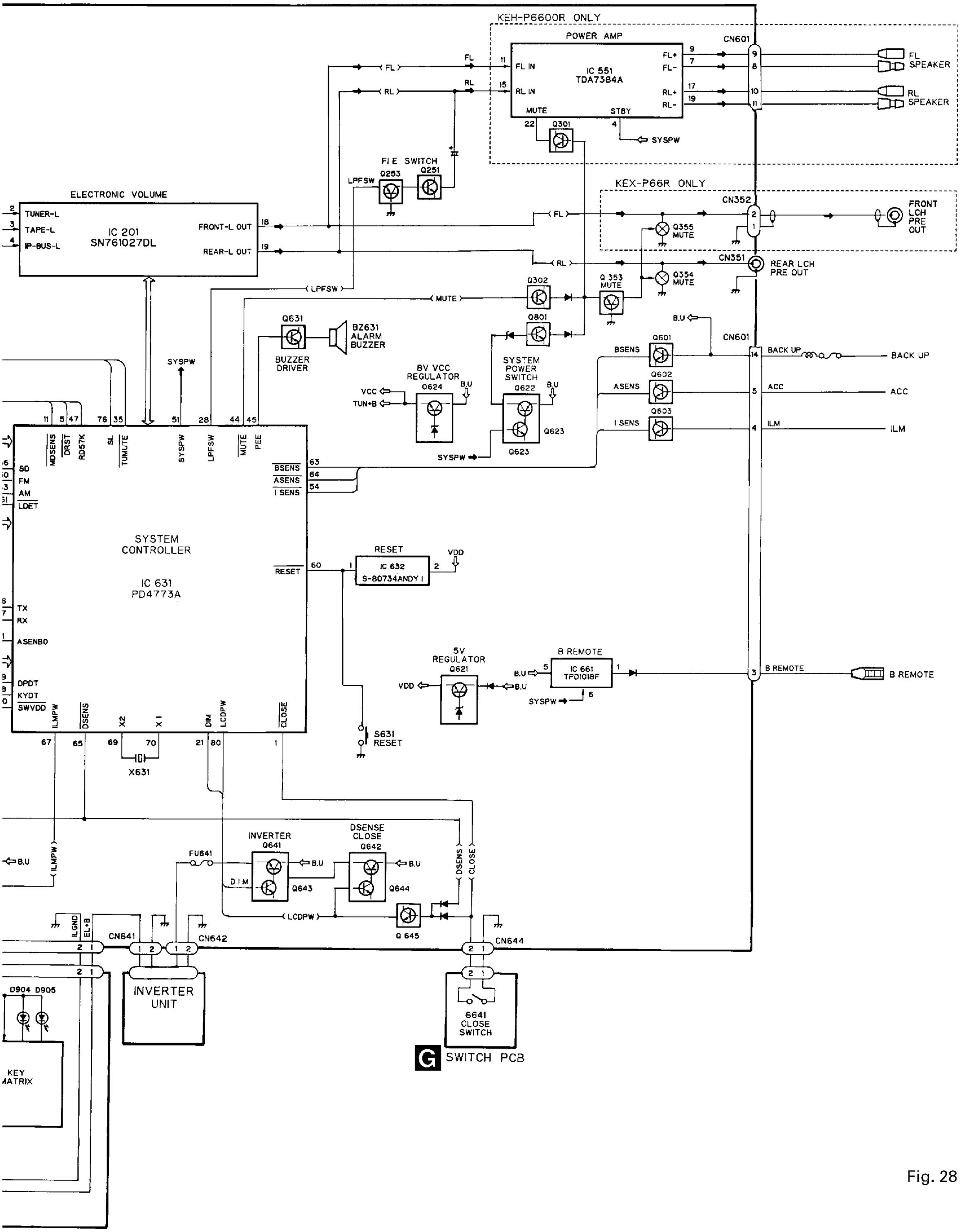
KEH-P6600R ONLY
POWER AMP
IC 551
TDA7384A
FL IN
RL IN
FL+
FL-
RL+
RL-
MUTE
STBY
Q301
SYSPW
CN601
FL SPEAKER
RL SPEAKER
FL
RL
FLE SWITCH
Q253
Q251
LPFSW
ELECTRONIC VOLUME
IC 201
SN761027DL
TUNER-L
TAPE-L
IP-BUS-L
FRONT-L OUT
REAR-L OUT
KEX-P66R ONLY
CN352
Q355 MUTE
FRONT LCH PRE OUT
CN351
Q354 MUTE
REAR LCH PRE OUT
Q302
Q 353 MUTE
MUTE
Q801
Q631
BZ631 ALARM BUZZER
BUZZER DRIVER
8V VCC REGULATOR
Q624
VCC
TUN+B
SYSTEM POWER SWITCH
Q622
Q623
B.U
Q601
Q602
Q603
BSENS
ASENS
I SENS
BACK UP
ACC
ILM
SYSTEM CONTROLLER
IC 631
PD4773A
MDSENS
DRST
RD57K
SL
TUMUTE
LPFSW
PEE
SD
FM
AM
LDET
TX
RX
ASENBO
DPDT
KYDT
SWVDD
ILMPW
DSENS
X2
X1
DIM
LCDPW
CLOSE
RESET
IC 632
S-80734ANDY I
VDD
S631 RESET
X631
5V REGULATOR
Q621
B REMOTE
IC 661
TPD1018F
INVERTER Q641
DSENSE CLOSE Q642
FU641
Q643
Q644
Q 645
CN641
CN642
CN644
ILGND
EL+B
D904 D905
KEY MATRIX
INVERTER UNIT
S641 CLOSE SWITCH
G SWITCH PCB

Fig. 28

8. OPERATIONS AND SPECIFICATIONS

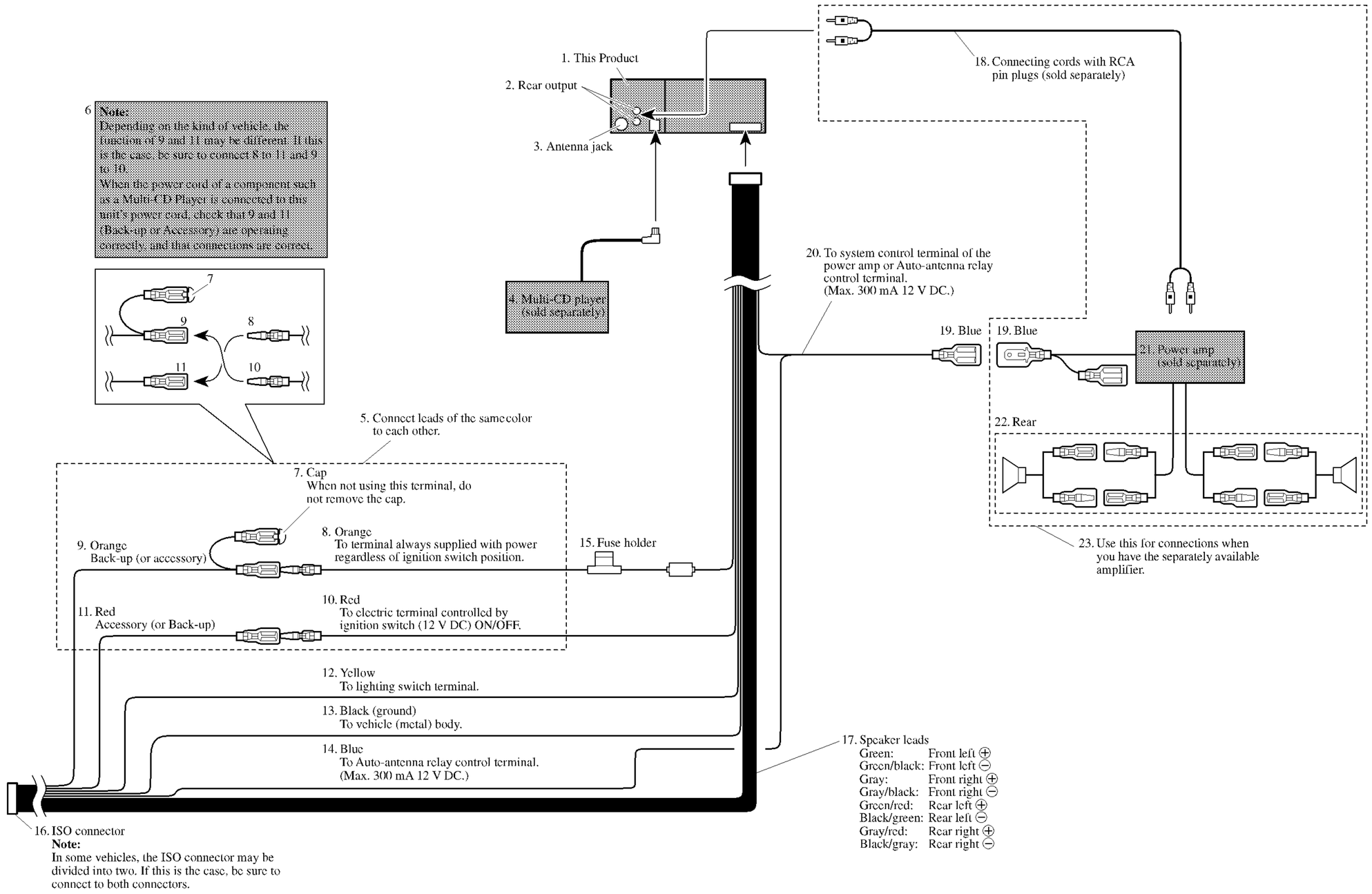

Fig. 29

Disc Number Search

■ Disc Number Search (for 6-Disc, 12-Disc types)

You can select discs directly with the 1 to 6 buttons. Just press the number corresponding to the disc you want to listen to.

Note:
- When a 12-Disc Multi-CD Player is connected and you want to select disc 7 to 12, press the 1 to 6 buttons for 2 seconds or longer.

- **Select the desired disc. (eg. Press button 3.)**

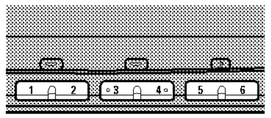

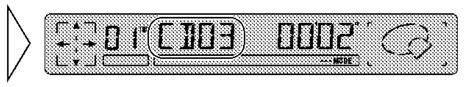

Specifications

General

Power source ..... 14.4 V DC (10.8 – 15.1 V allowable)
Grounding system ..... Negative type
Max. current consumption
(KEH-P6600R) ..... 8.5 A
(KEX-P66R) ..... 1.0 A
Dimensions
(mounting size) .... 178 (W) × 50 (H) × 150 (D) mm
(front face) ..... 188 (W) × 58 (H) × 19 (D) mm
Weight
(KEH-P6600R) ..... 1.4 kg
(KEX-P66R) ..... 1.3 kg

Amplifier (KEH-P6600R)

Maximum power output ..... 35 W × 4
Continuous power output ..... 22 W × 4
(DIN45324, +B = 14.4 V)
Load impedance ..... 4 Ω (4 – 8 Ω allowable)
Preout output level/output impedance ..... 500 mV/1 kΩ
Tone controls
(Bass) ..... ±12 dB (100 Hz)
(Treble) ..... ±12 dB (10 kHz)
Loudness contour ..... +10 dB (100 Hz), +7 dB (10 kHz)
(volume: –30 dB)

Amplifier (KEX-P66R)

Preout output level/output impedance ..... 500 mV/1 kΩ
Tone controls
(Bass) ..... ±12 dB (100 Hz)
(Treble) ..... ±12 dB (10 kHz)
Loudness contour ..... +10 dB (100 Hz), +7 dB (10 kHz)
(volume: –30 dB)

Cassette player

Tape ..... Compact cassette tape (C-30 – C-90)
Tape speed .... 4.76 cm/sec. (+0.14 cm/sec. –0.05 cm/sec.)
Fast forward/rewinding time .. Approx. 100 sec. for C-60
Wow & flutter ..... 0.09% (WRMS)
Frequency response
(KEH-P6600R)
..... Metal: 30 – 19,000 Hz (±3 dB)
(KEX-P66R)
..... Metal: 25 – 19,000 Hz (±3 dB)
Stereo separation
(KEH-P6600R) ..... 45 dB
(KEX-P66R) ..... 50 dB
Signal-to-noise ratio
..... Metal: Dolby B NR IN: 67 dB (IEC-A network)
Dolby NR OUT: 61 dB (IEC-A network)

FM tuner

Frequency range ..... 87.5 – 108 MHz
Usable sensitivity
..... 11 dBf (1.0 µV/75 Ω, mono, S/N: 30 dB)
50 dB quieting sensitivity .... 16 dBf (1.7 µV/75 Ω, mono)
Signal-to-noise ratio ..... 70 dB (IEC-A network)
Distortion ..... 0.3% (at 65 dBf, 1 kHz, stereo)
Frequency response ..... 30 – 15,000 Hz (±3 dB)
Stereo separation ..... 40 dB (at 65 dBf, 1 kHz)

MW tuner

Frequency range ..... 531 – 1,602 kHz
Usable sensitivity ..... 18 µV (25 dB) (S/N: 20 dB)
Selectivity ..... 50 dB (±9 kHz)

LW tuner

Frequency range ..... 153 – 281 kHz
Usable sensitivity ..... 30 µV (30 dB) (S/N: 20 dB)
Selectivity ..... 50 dB (±9 kHz)

Note:
- Specifications and the design are subject to possible modification without notice due to improvements.