10. Schematic Diagram

10-1 MAIN

This Document can not be used without Samsung's authorization.

Power
Signal

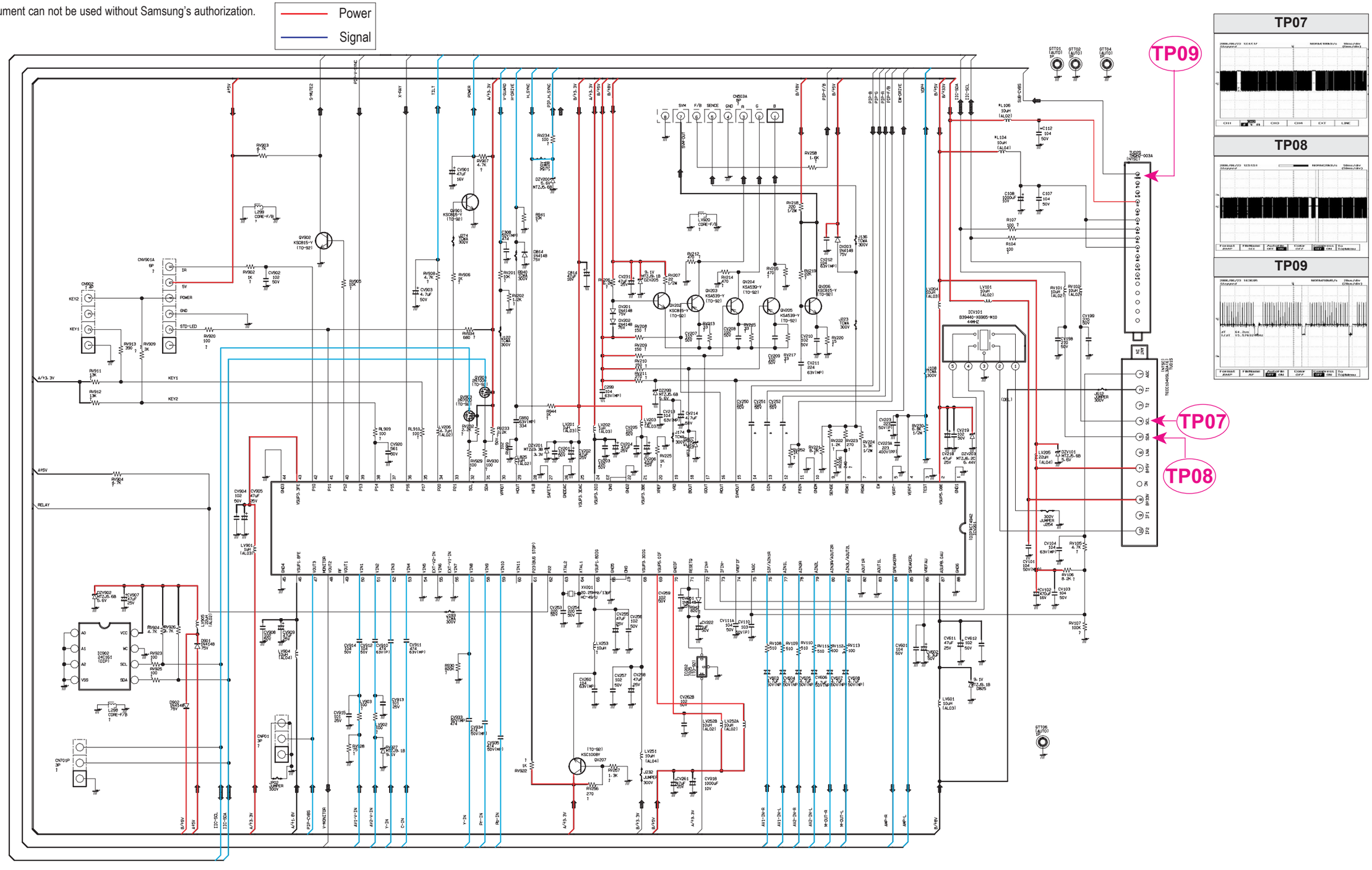

10-2 POWER

This Document can not be used without Samsung's authorization.

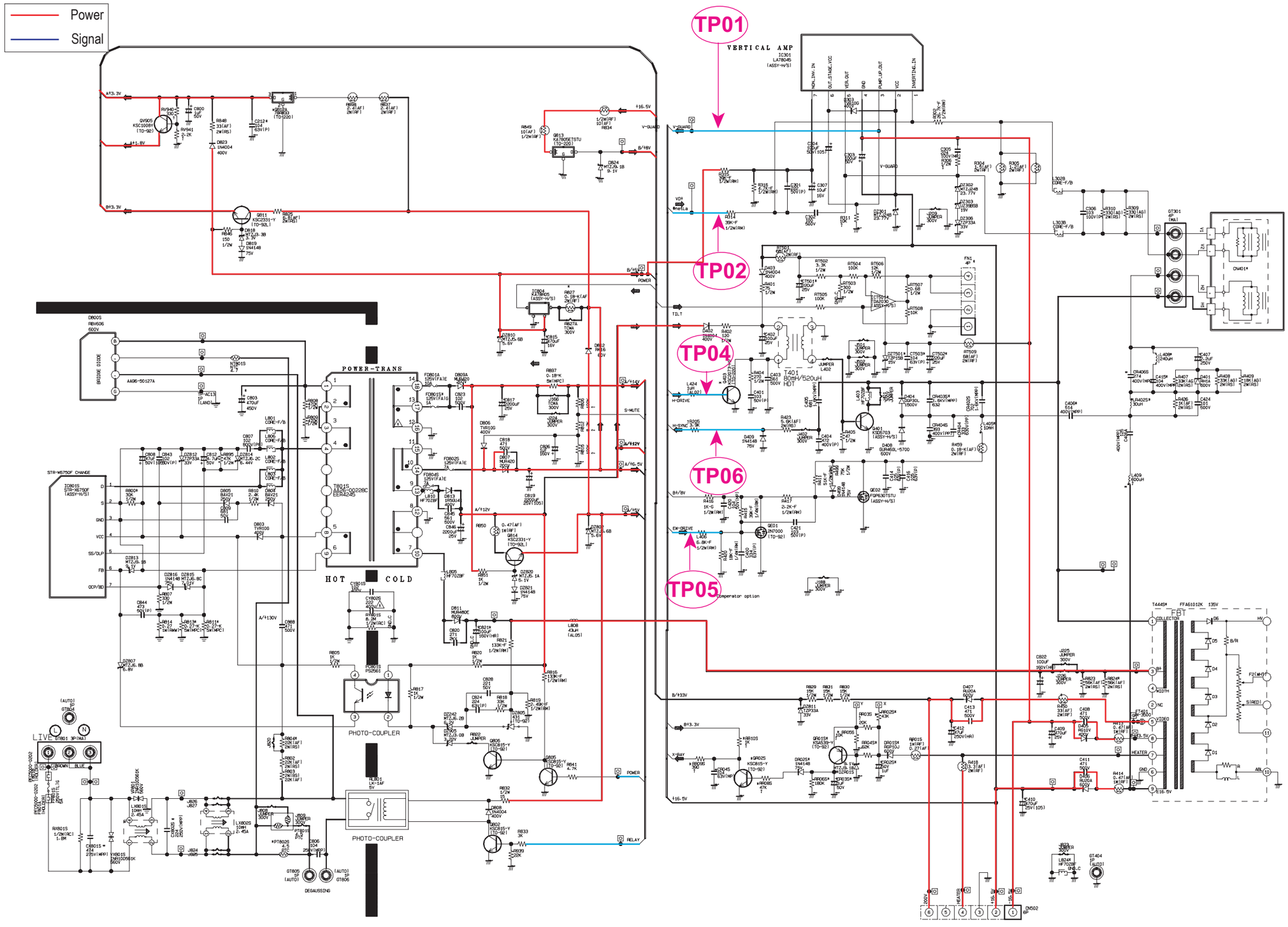

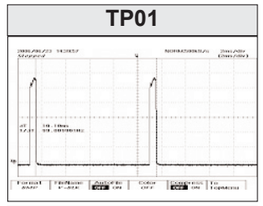

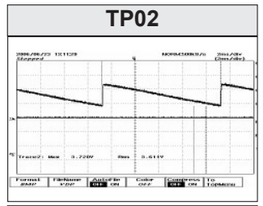

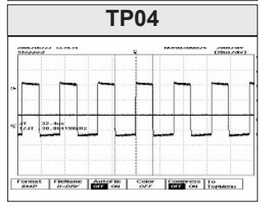

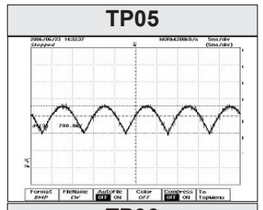

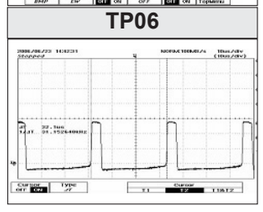

10-3 Sound

This Document can not be used without Samsung's authorization.

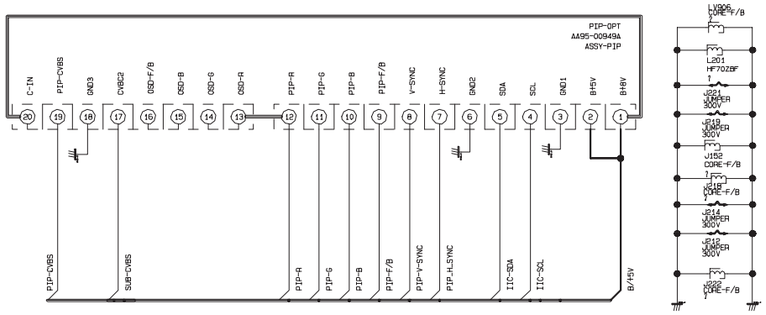

P I P M O D U L E (T D A 9 4 8 8) B L O C K

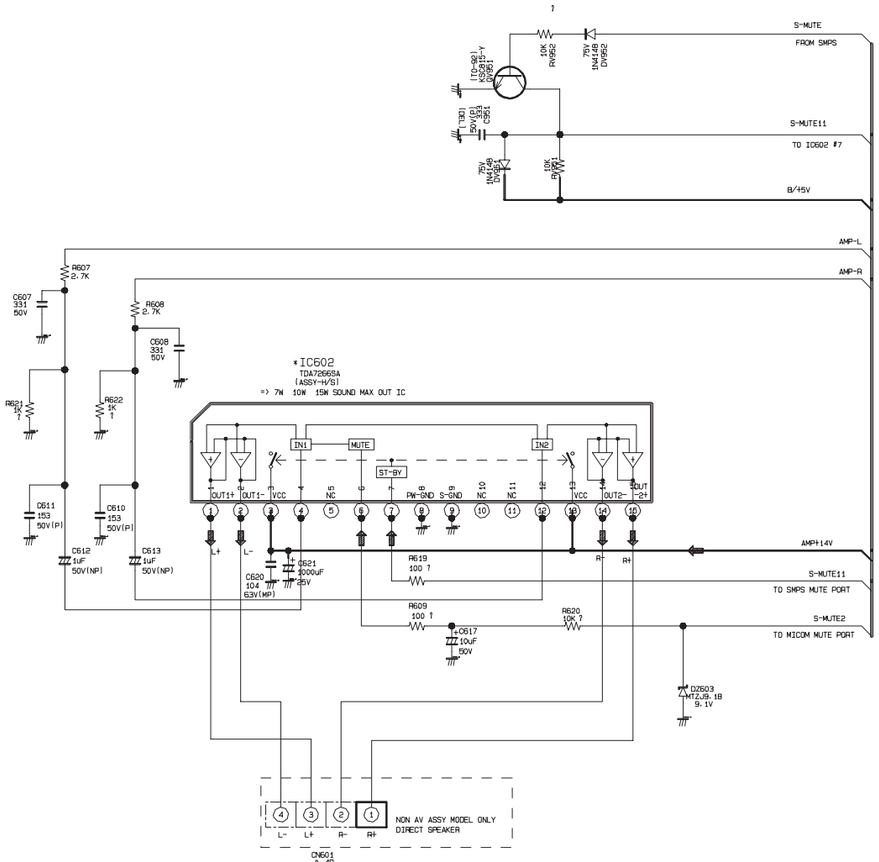
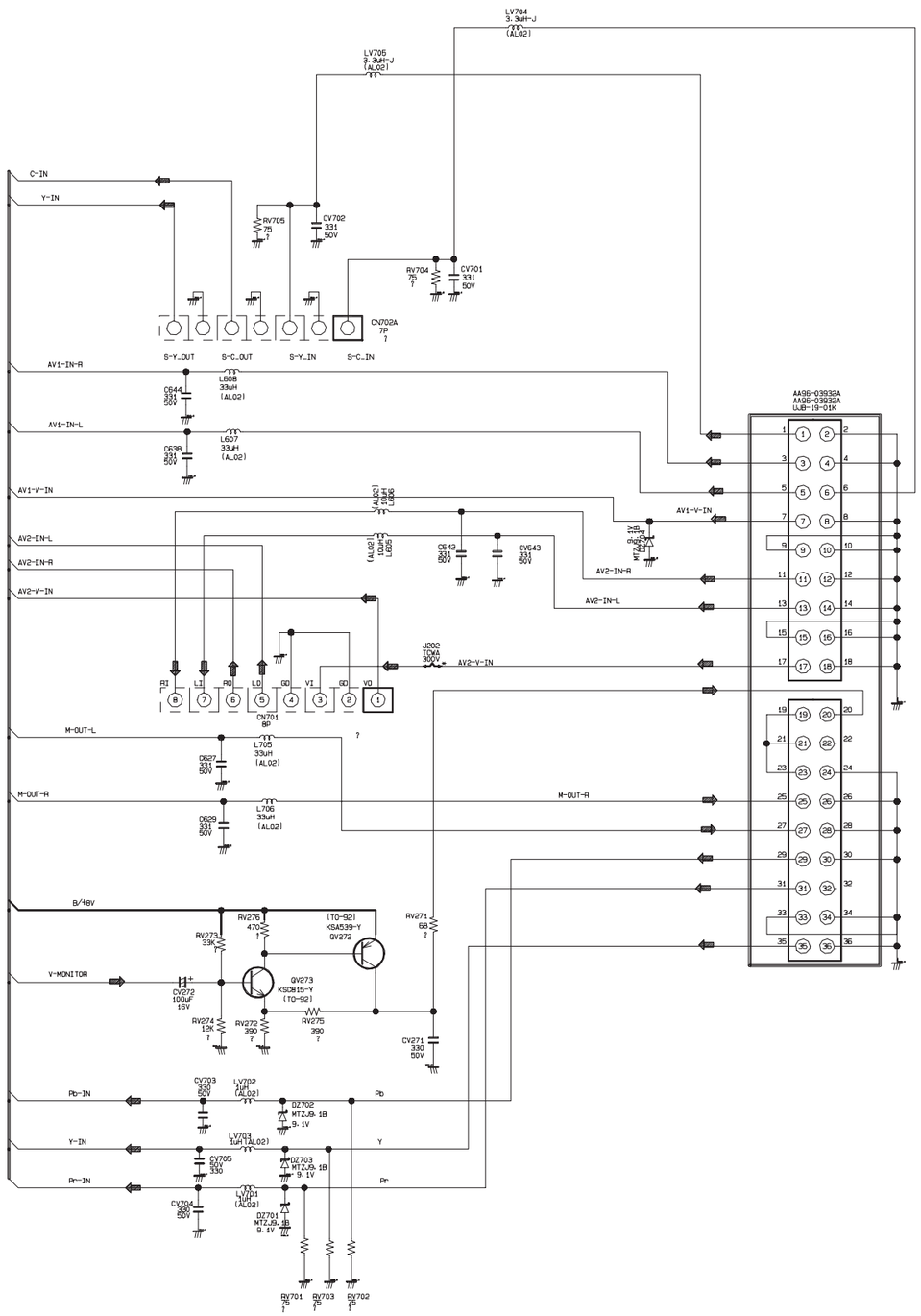
S O U N D O U T O U T & J A C K B L O C K